FINITE ELEMENT ANALYSIS of WIDE FLANGE PRESTRESSED GIRDERS to UNDERSTAND and CONTROL END CRACKING

Research Update
by
Michael G. Oliva, Professor
Pinar Okumus, PhD. Candidate

THE UNIVERSITY of WISCONSIN MADISON

12-16-2010

AGENDA

- Problem and Objectives
- Verification of the Finite Element Model (FEM)
- Exploring Potential Solutions
- Recommendations

GIRDER END CRACKS

Inclined cracks

Web cracks

Y cracks

PROJECT GOALS

Through Finite Element Analysis:

- Investigate the stress pattern at the girder ends
- Understand causes of cracking
- Explore possible solutions to limit cracking

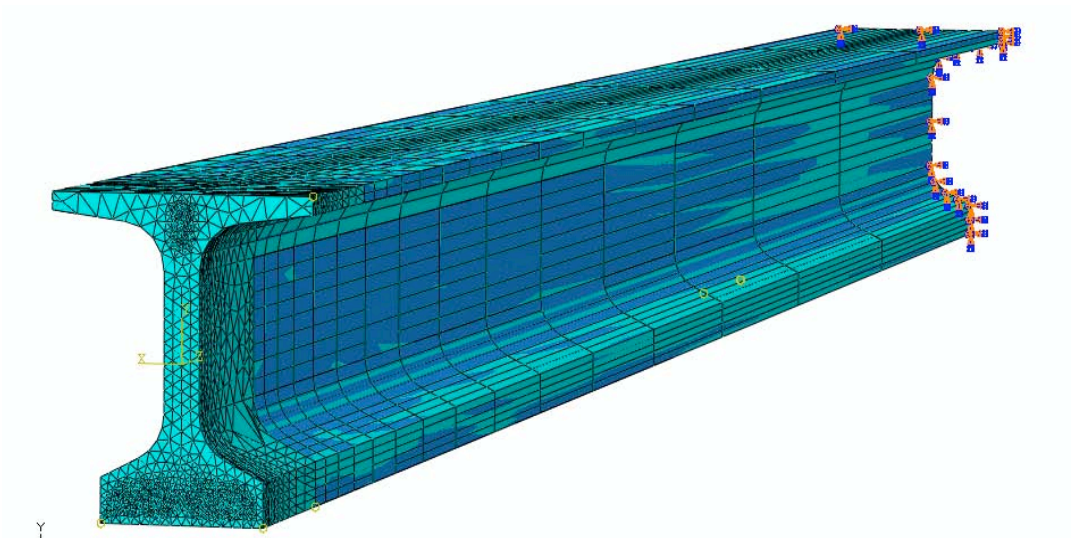

VERIFICATION of the FEM

Test data available on Girders:

- Spancrete W54
- County W54
- Texas Tx70

SPANCRETE W54 GIRDER - Cracks

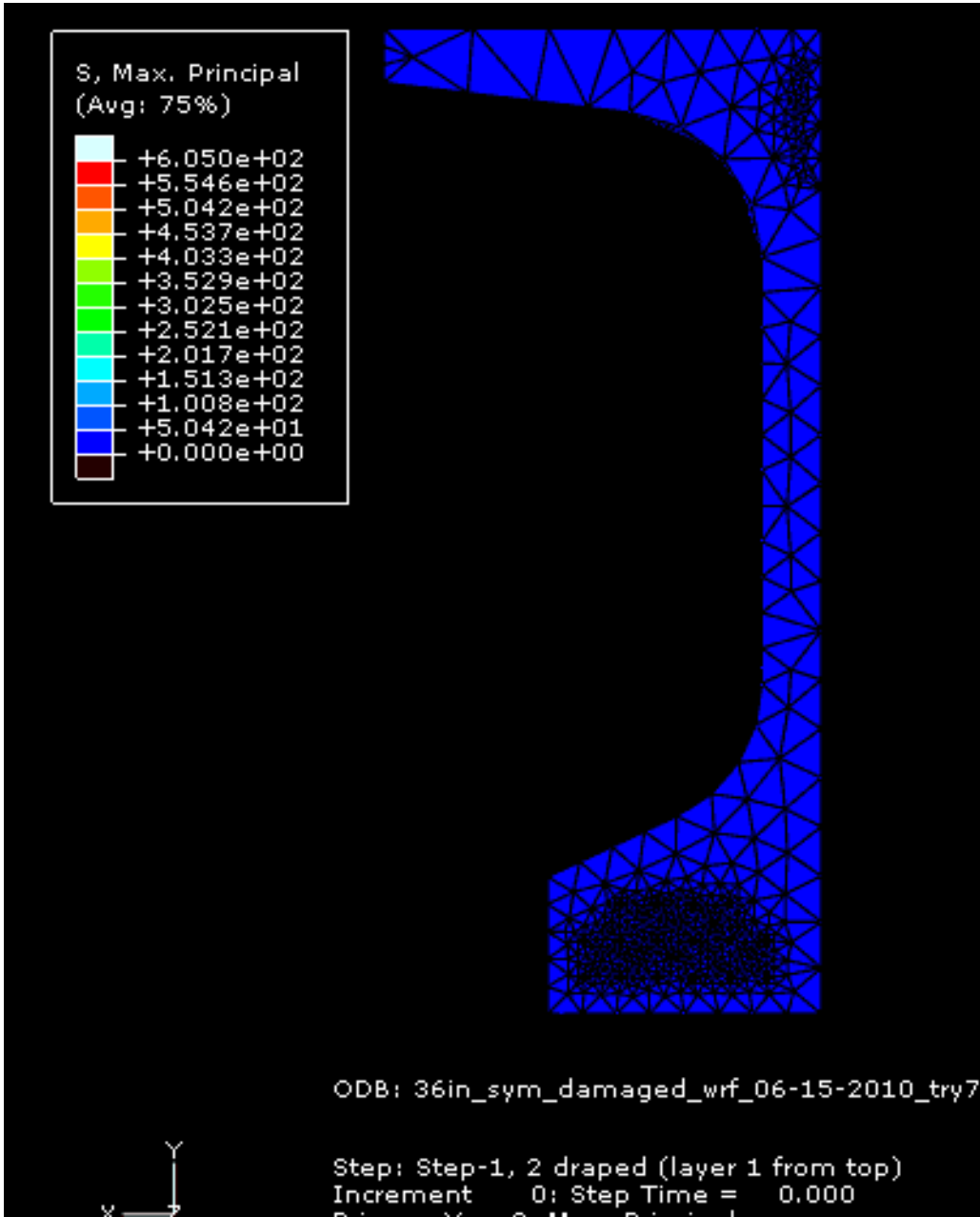

SPANCRETE W54 GIRDER - Strains

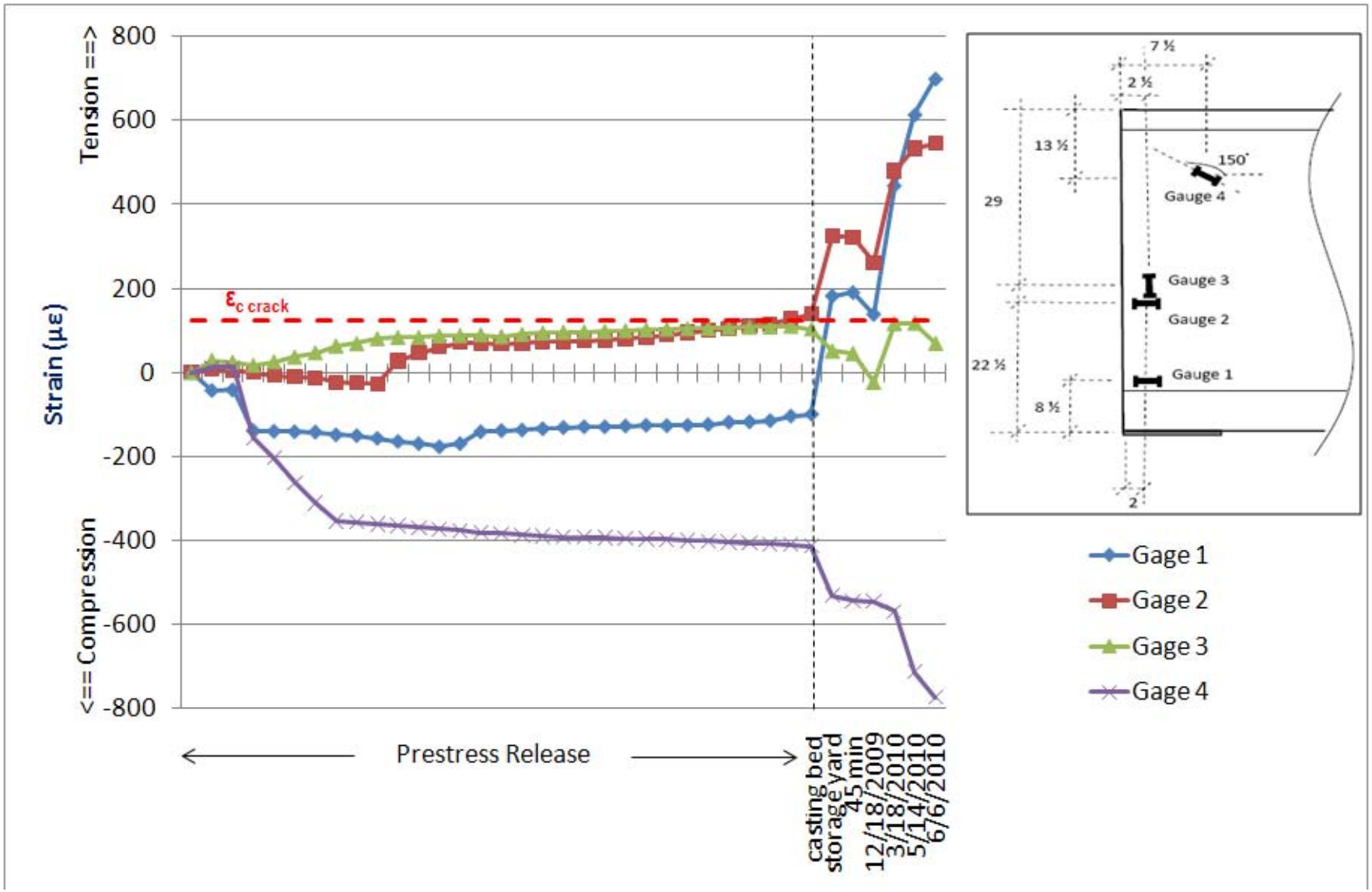

SPANCRETE W54 GIRDER – Test vs FEM

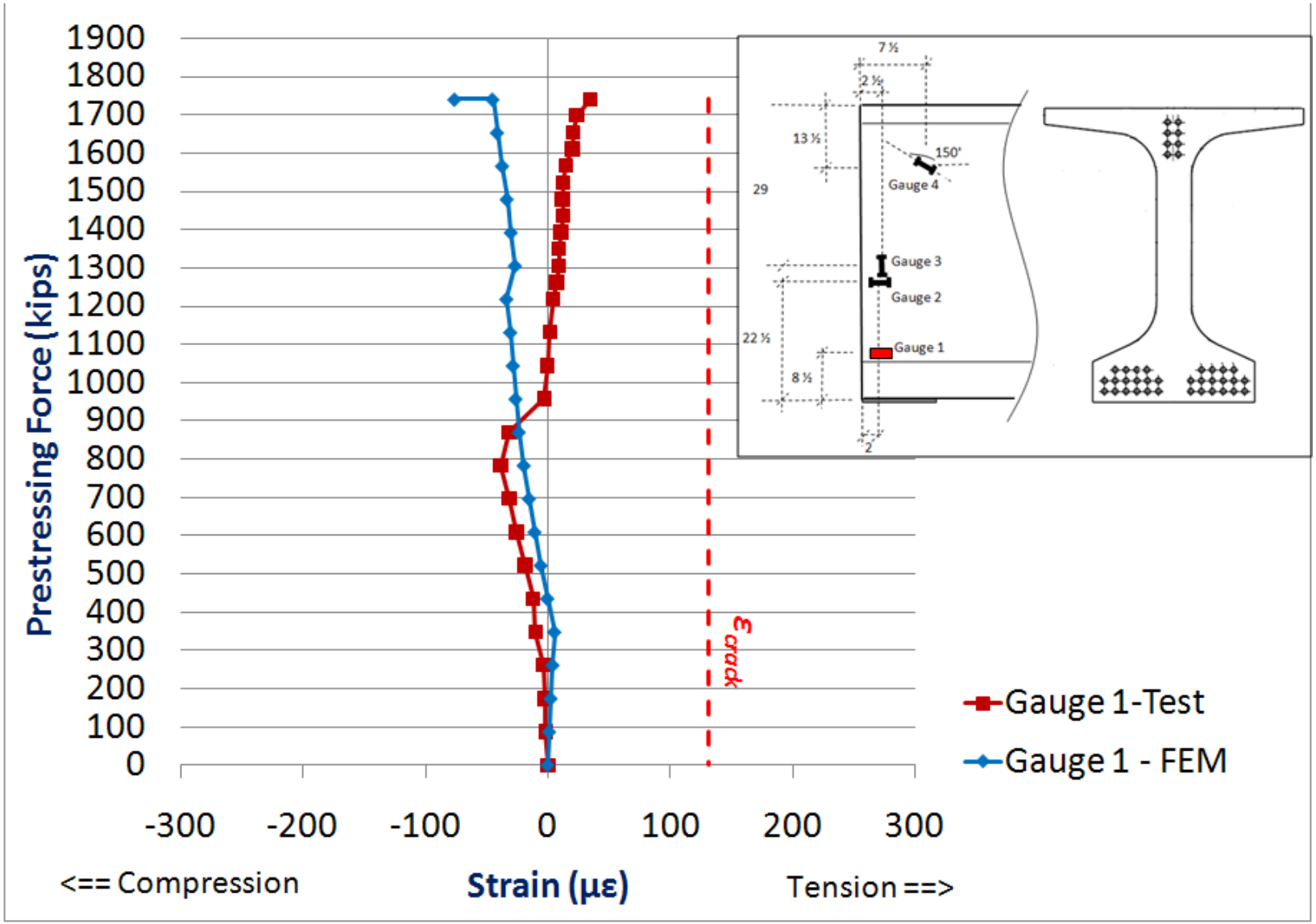

SPANCRETE W54 GIRDER – Test vs FEM

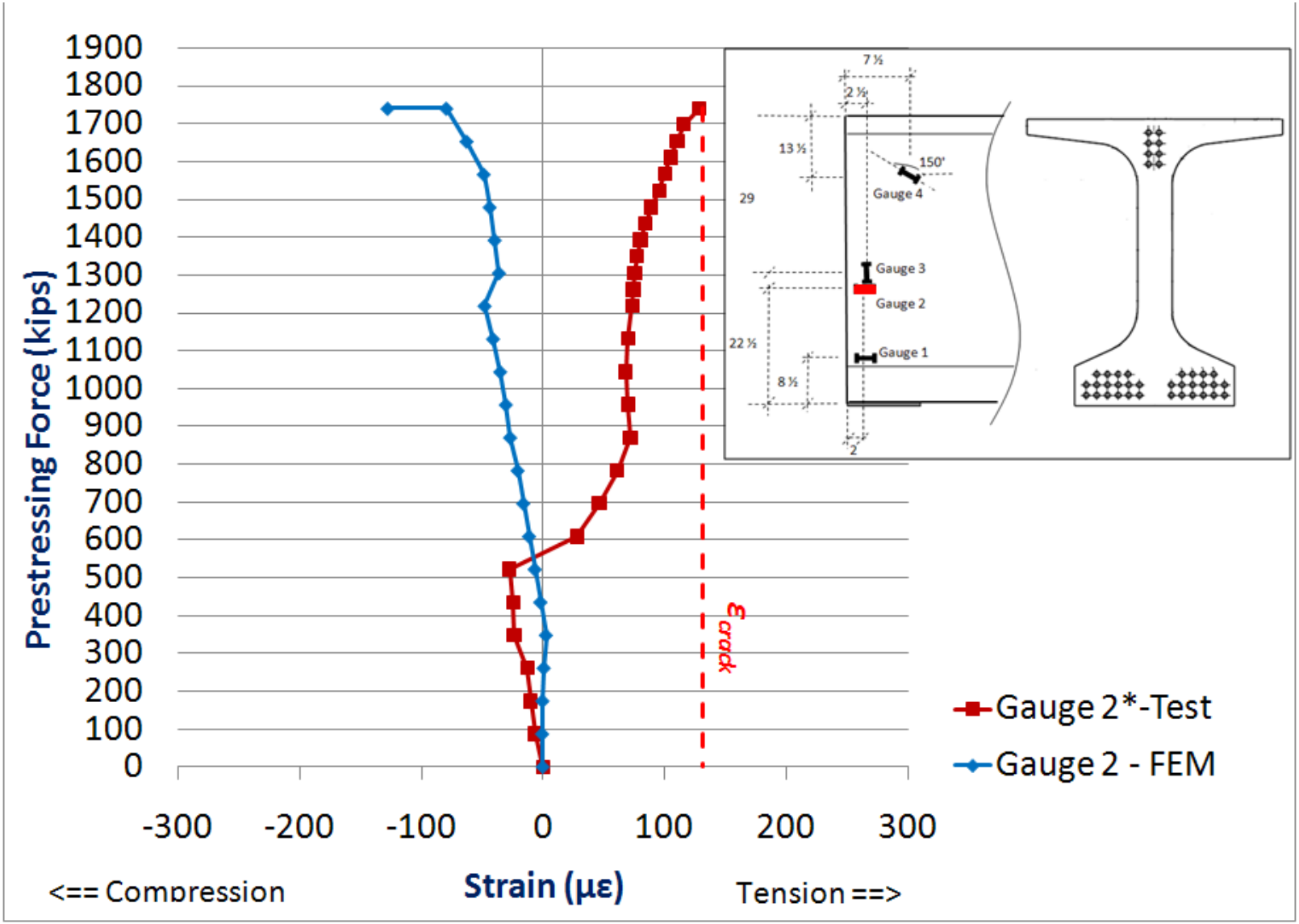

SPANCRETE W54 GIRDER – Test vs FEM

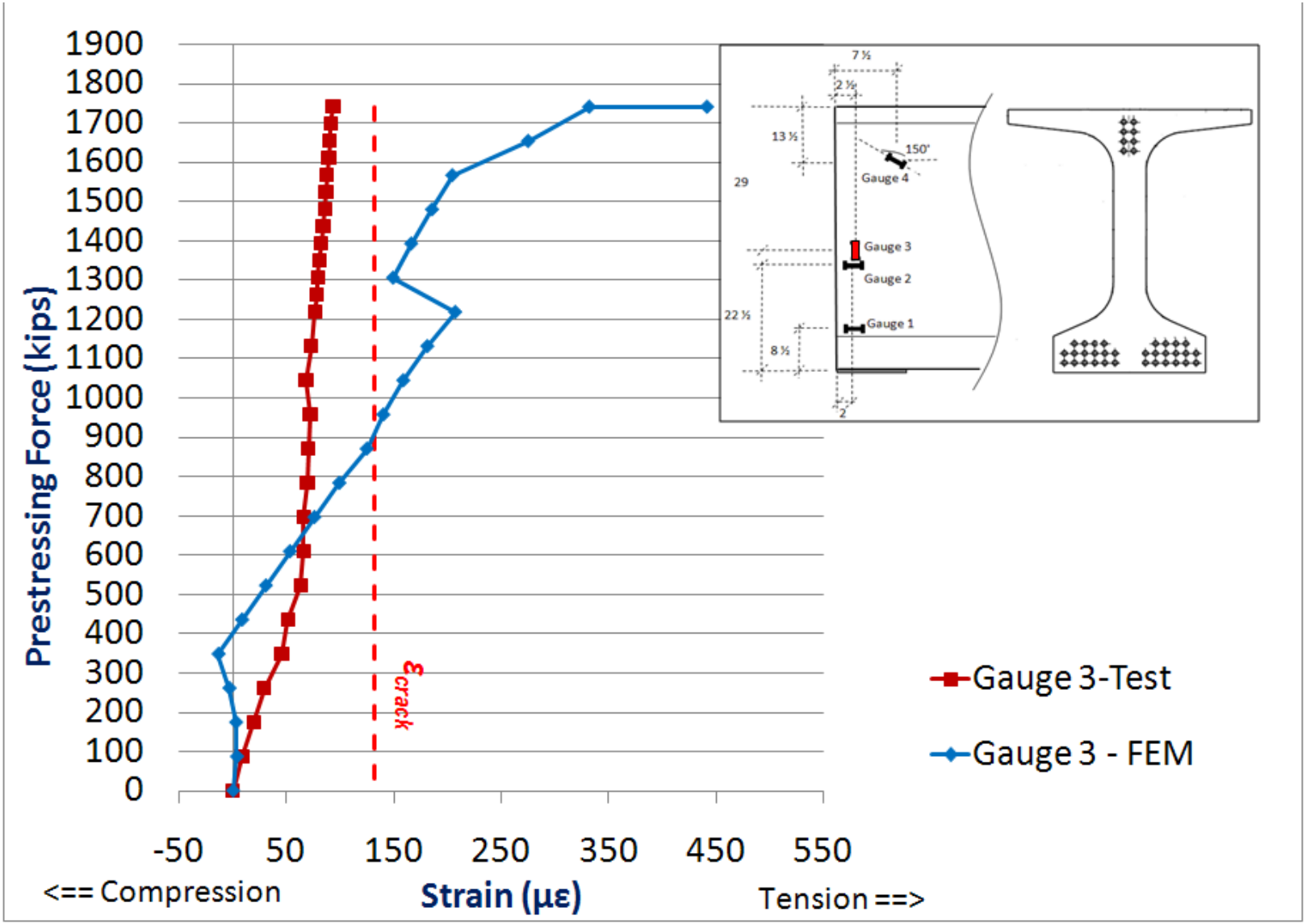

SPANCRETE W54 GIRDER – Test vs FEM

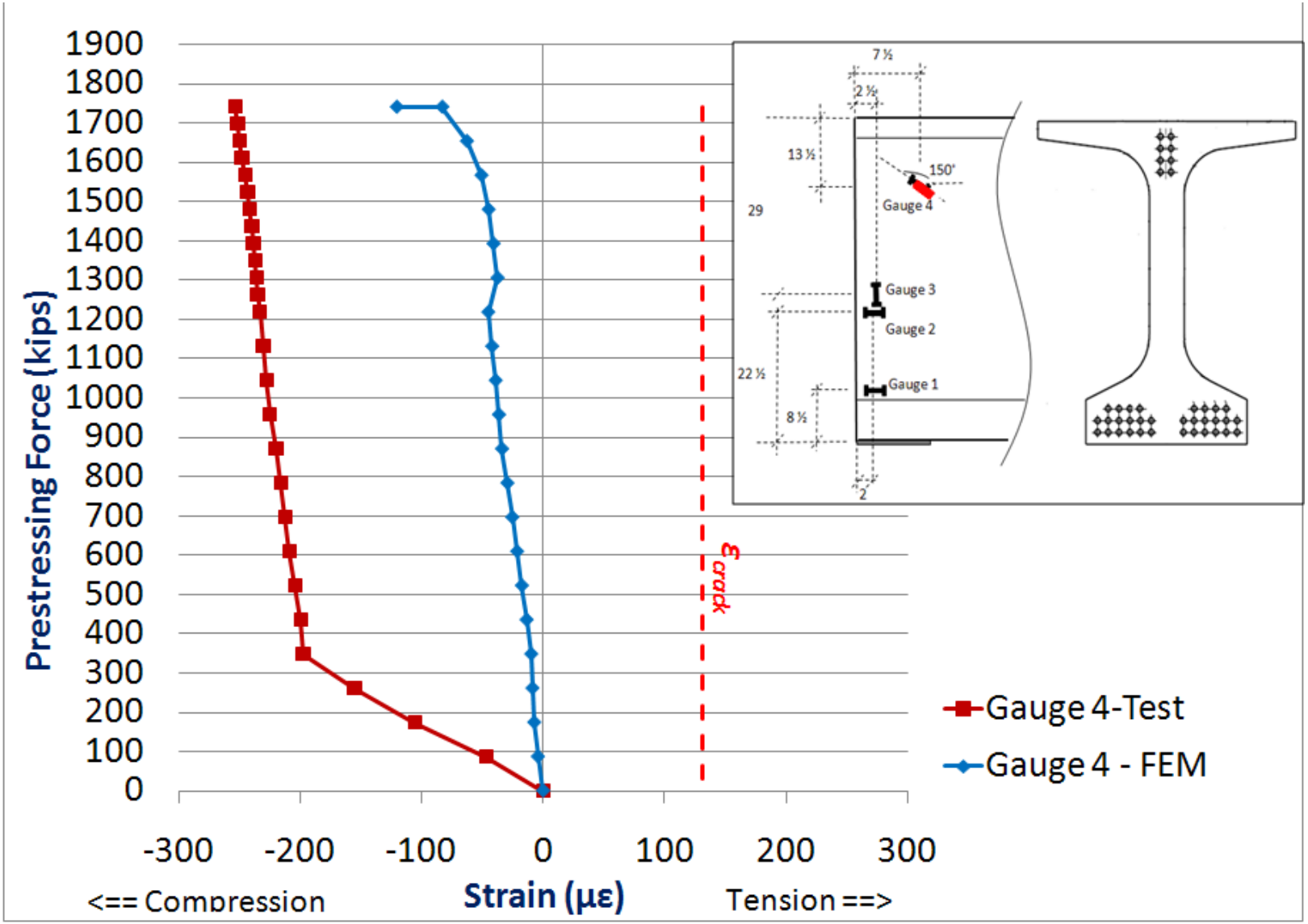

STRAIN FLOW at the ENDS

Girder End

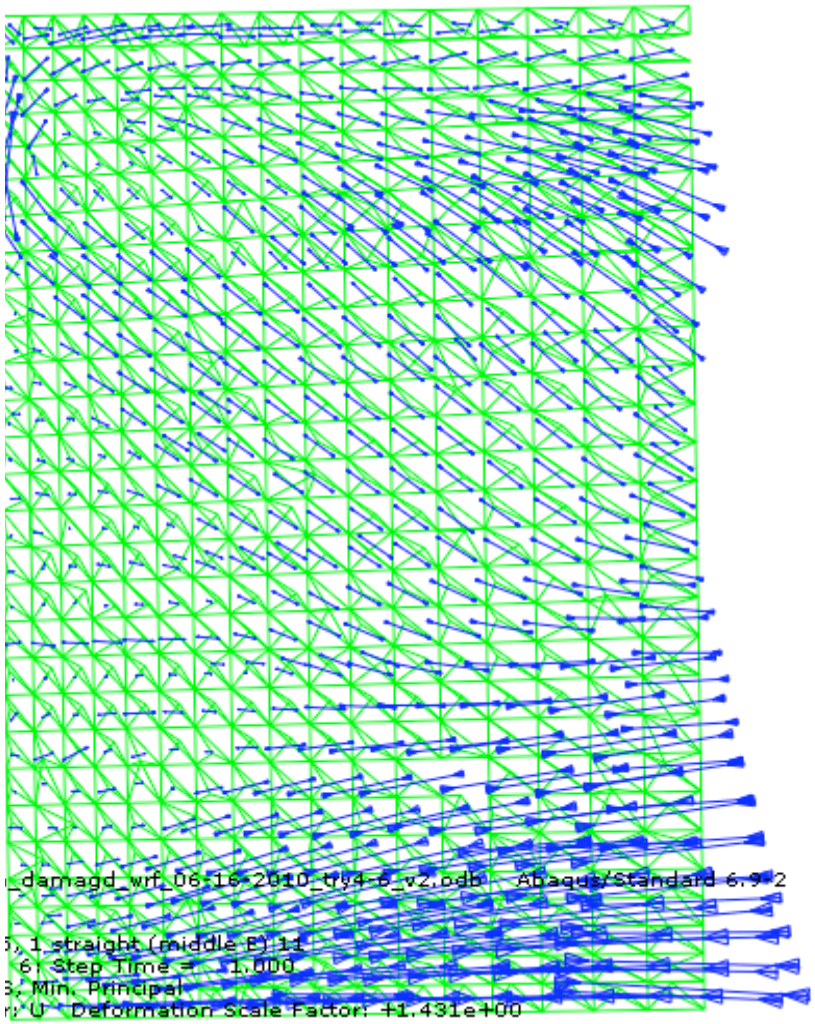

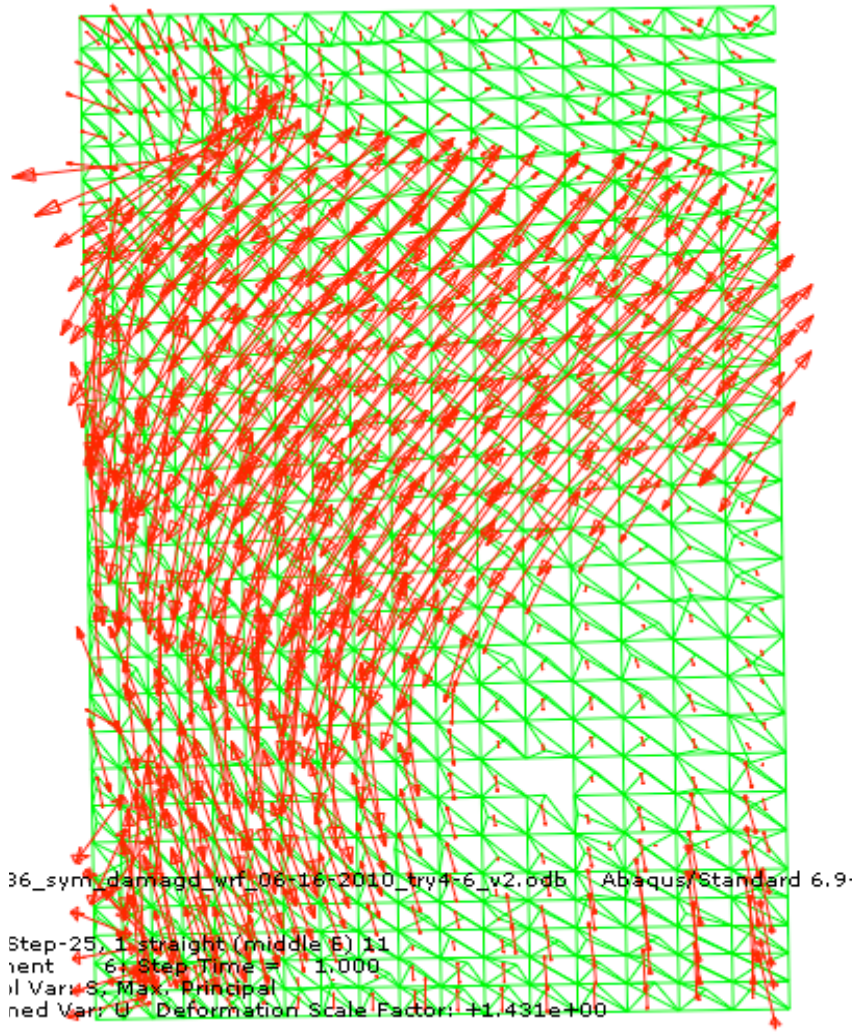

Principal Compression

Principal Tension

COUNTY W54 GIRDER - Cracks

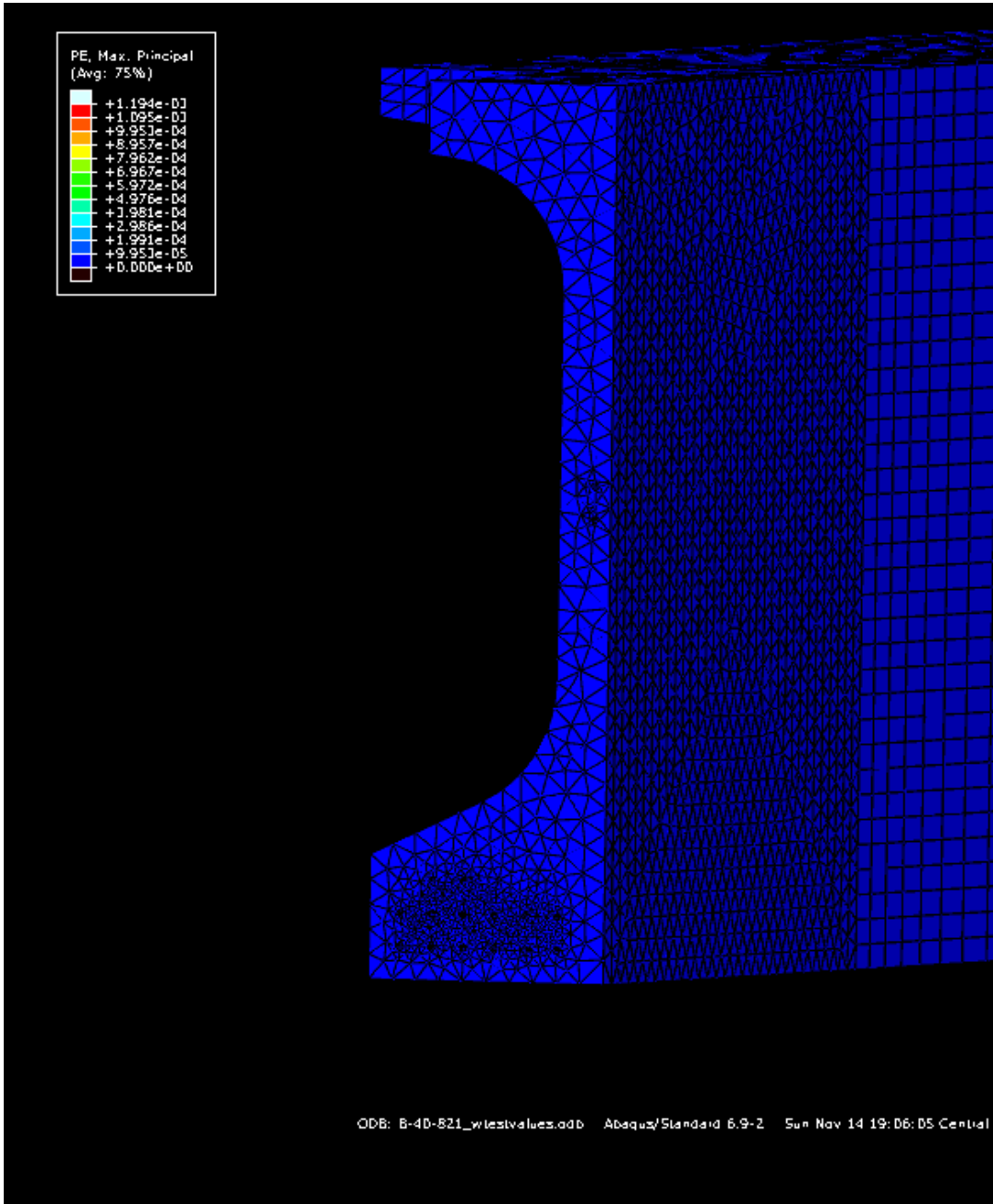

COUNTY W54 GIRDER - Strains

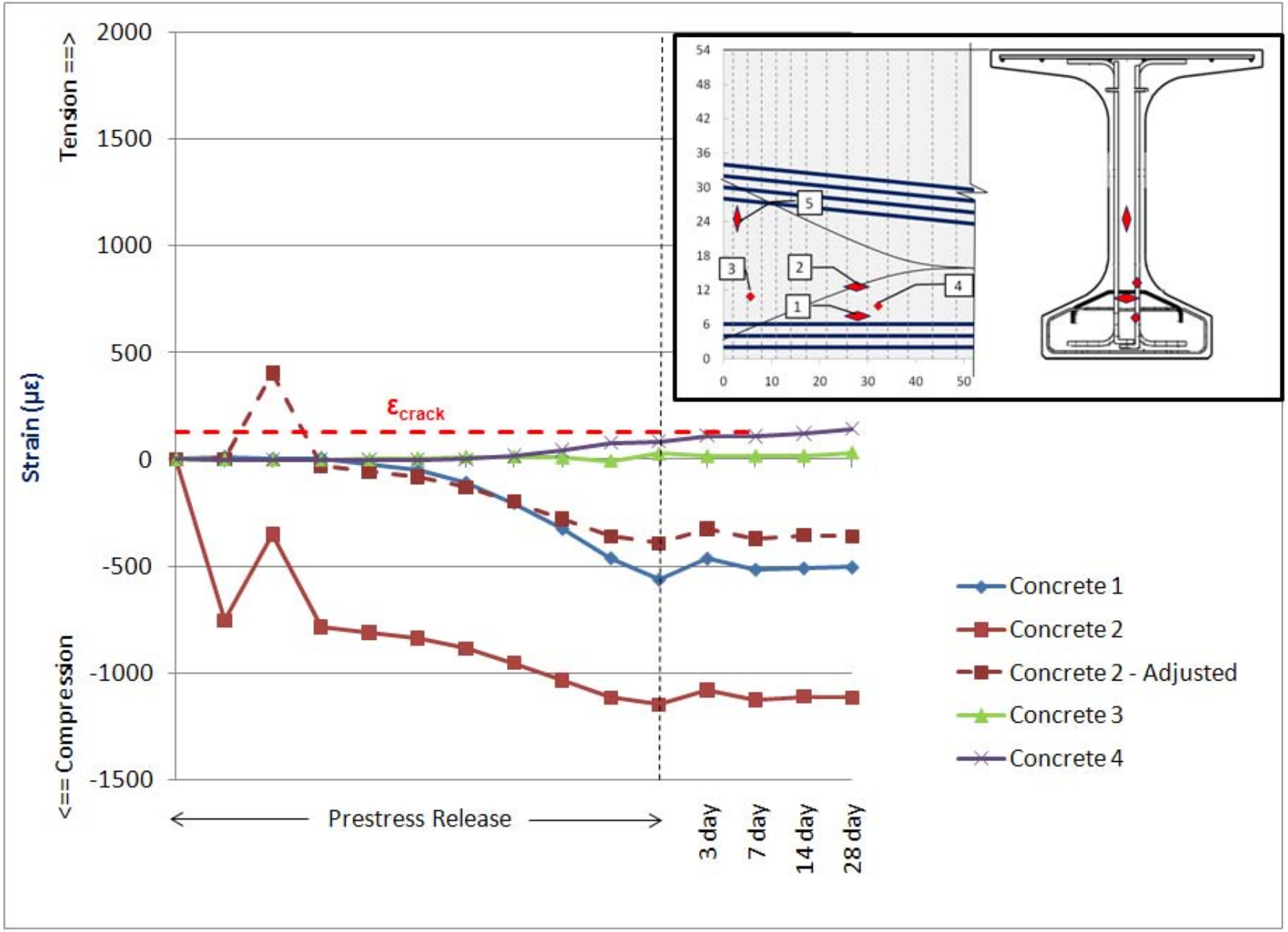

COUNTY W54 GIRDER – Test vs FEM

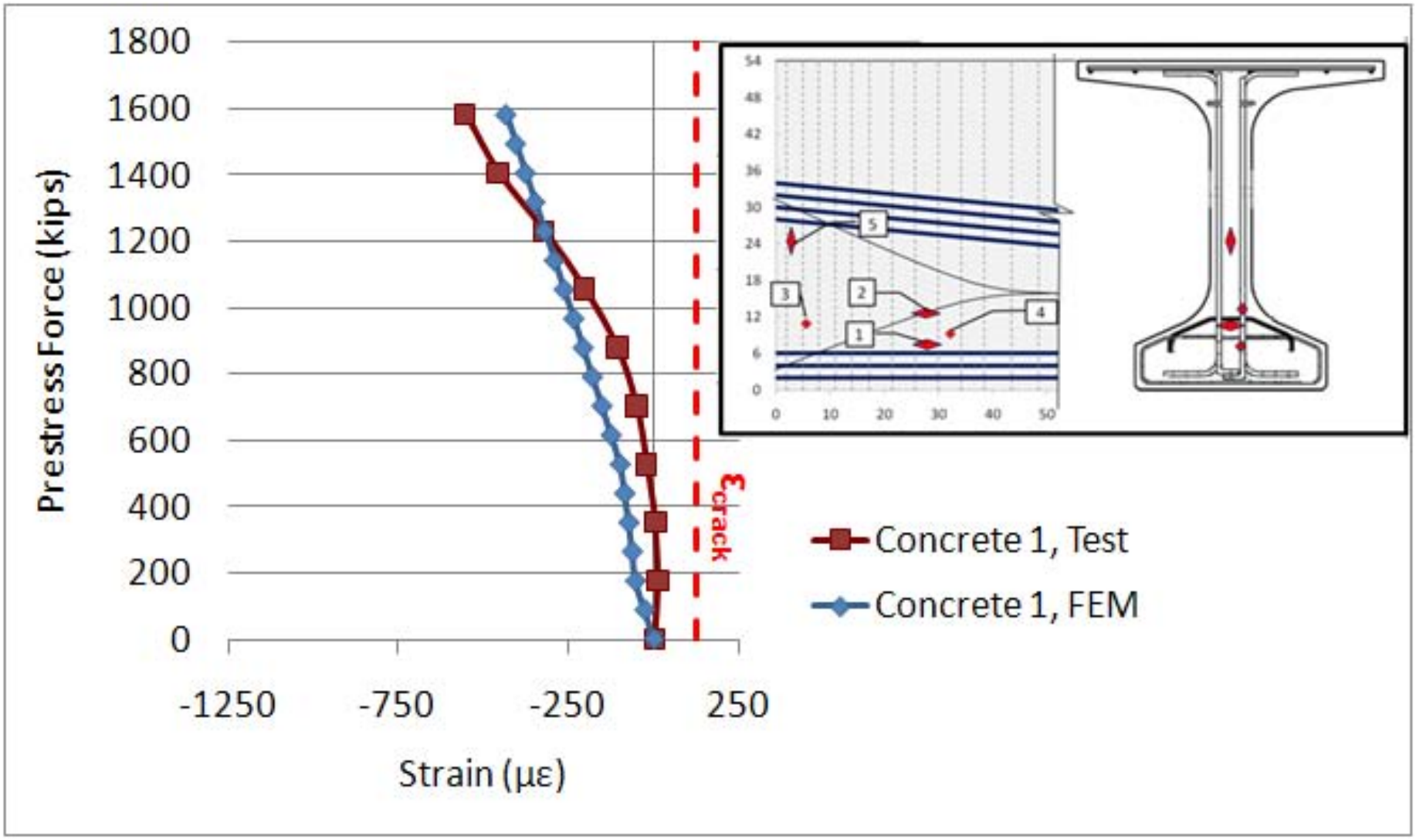

COUNTY W54 GIRDER – Test vs FEM

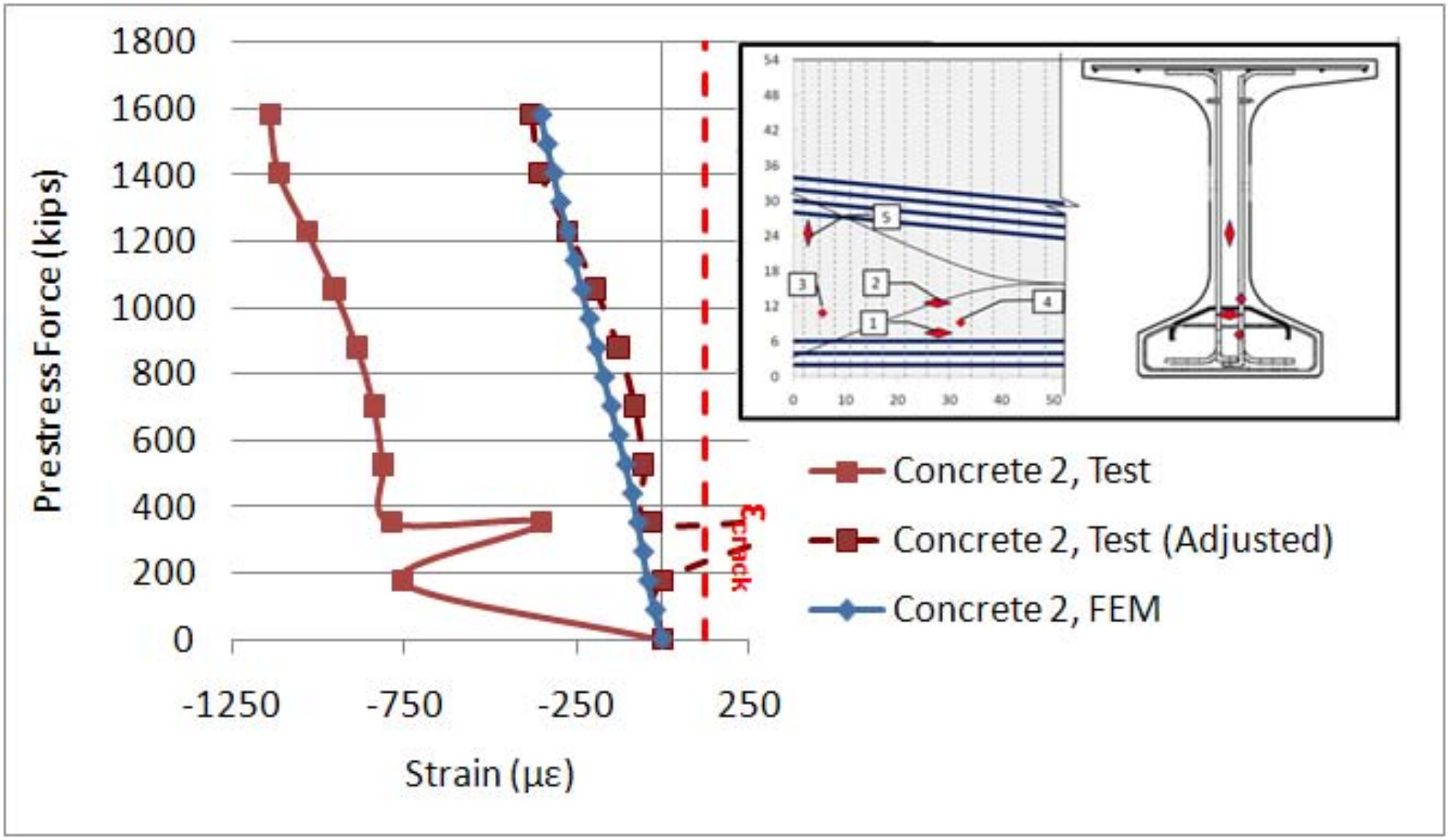

COUNTY W54 GIRDER – Test vs FEM

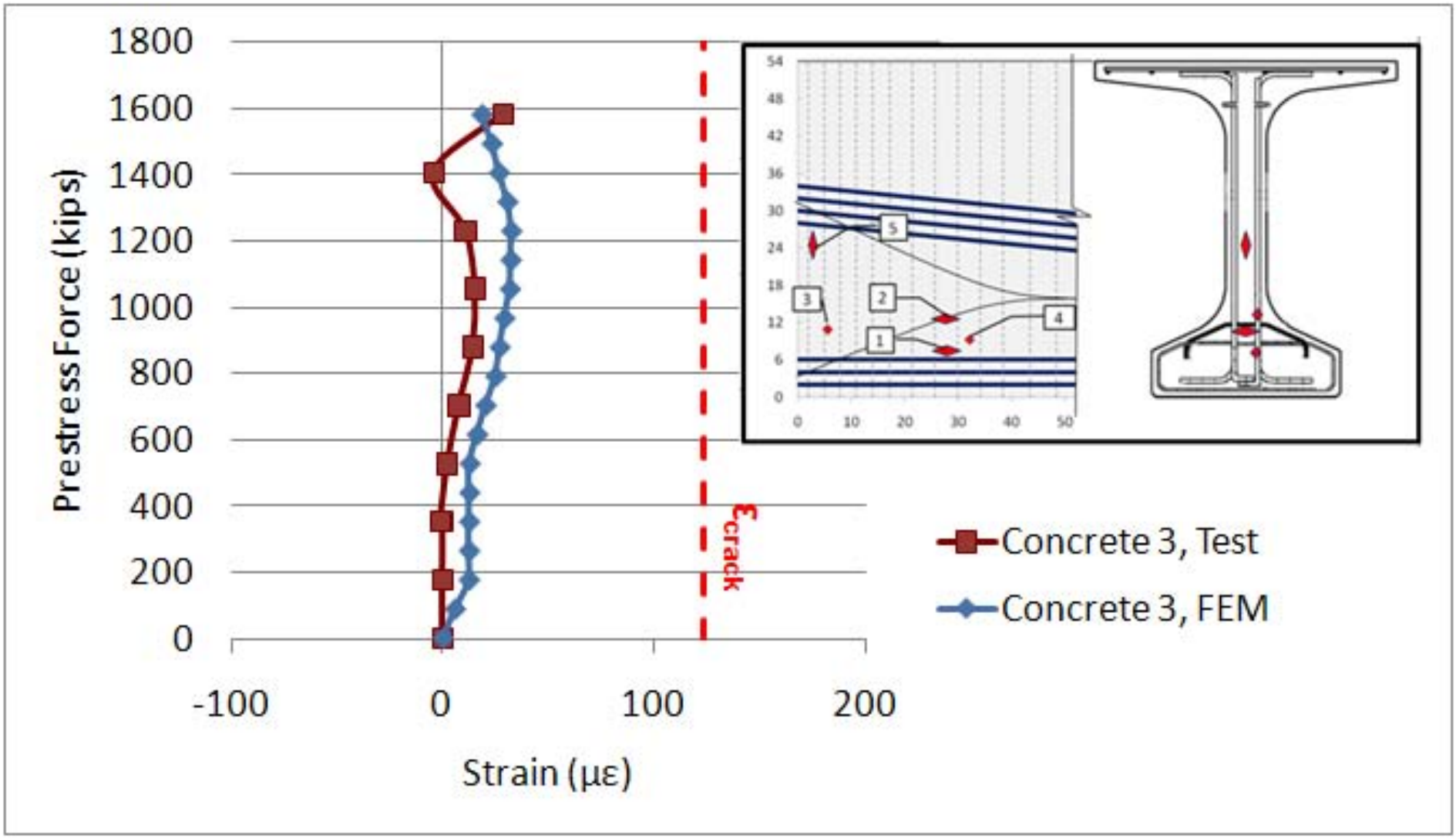

COUNTY W54 GIRDER – Test vs FEM

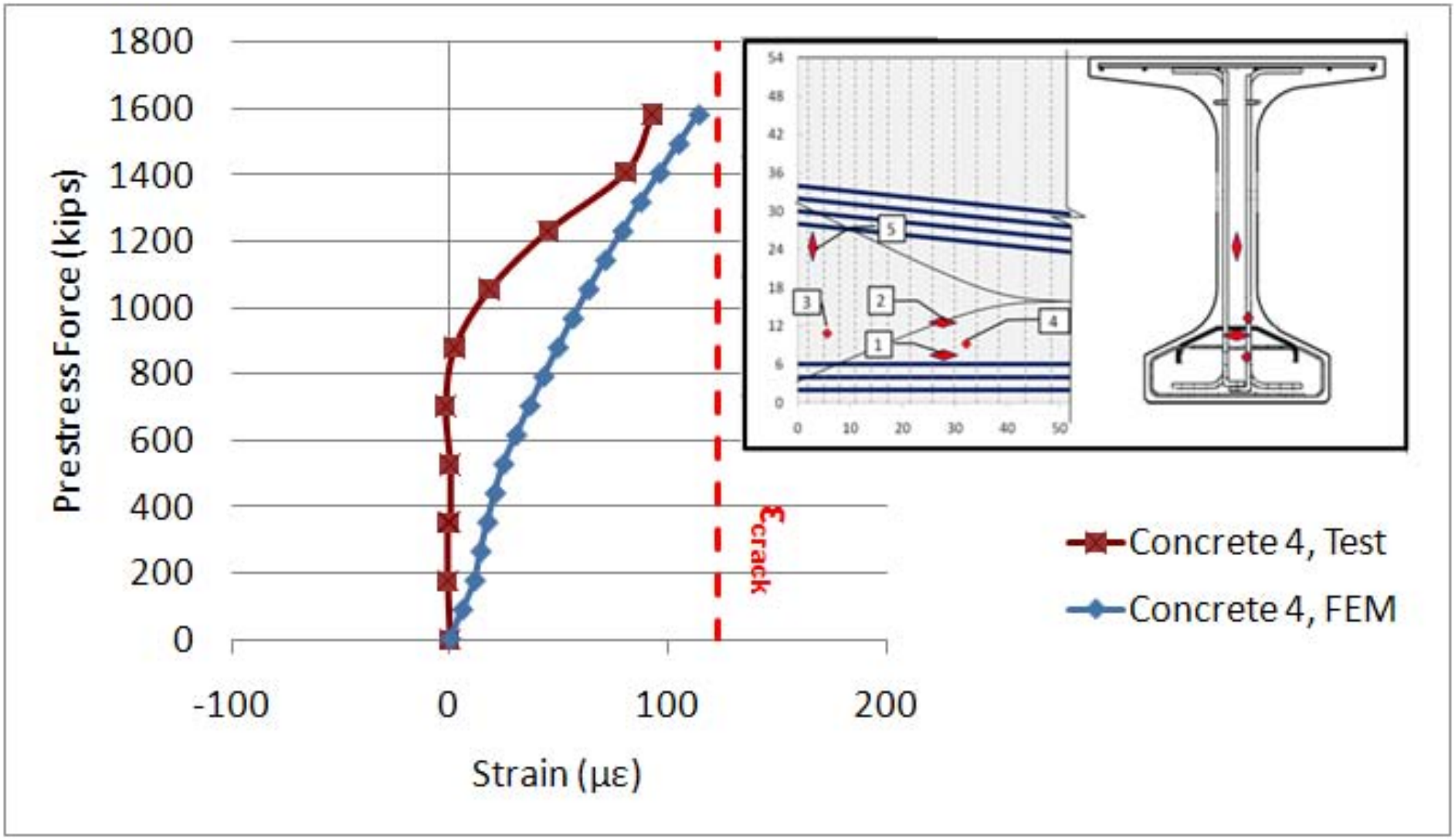

TEXAS Tx70 GIRDER – Test vs FEM

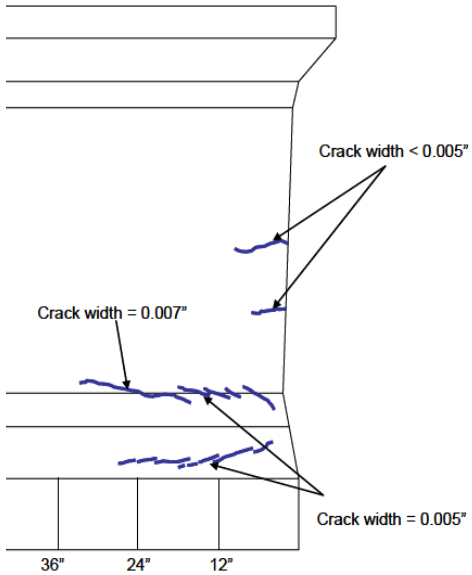

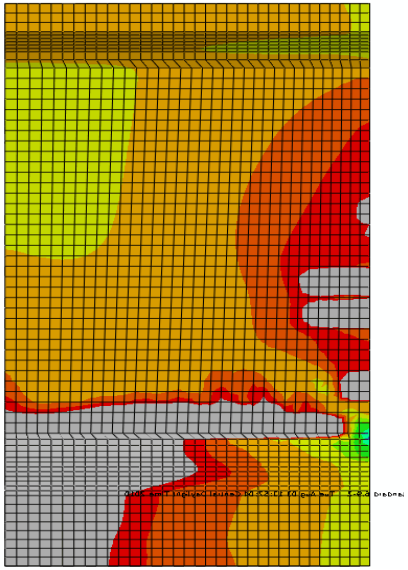

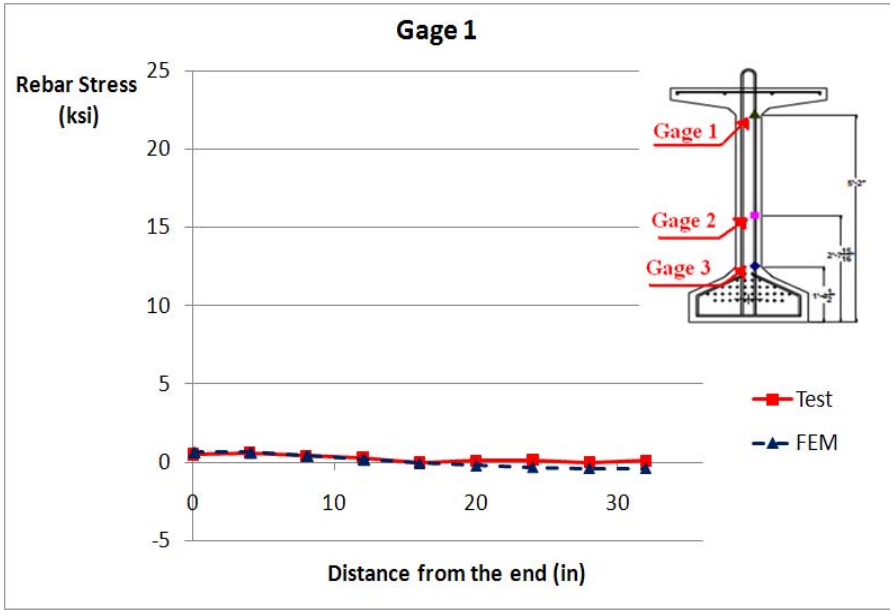

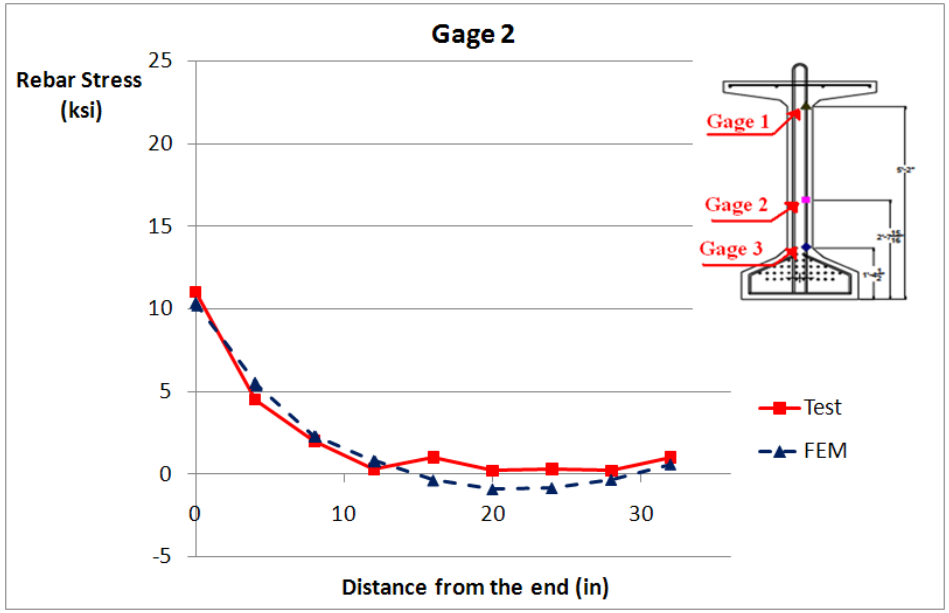

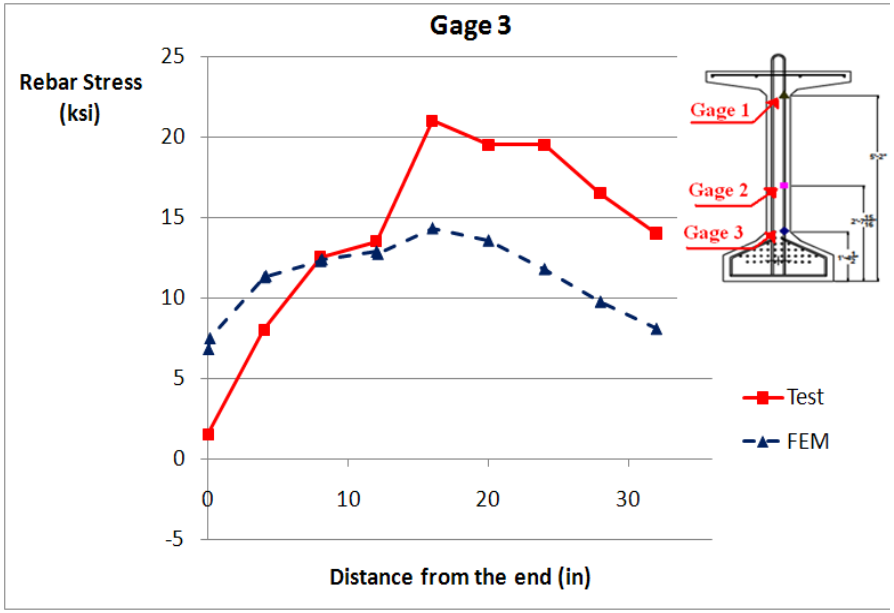

POTENTIAL SOLUTIONS

- Rebar Pattern
- Debonding Strands
- Combination of Debonding and Rebar Size
- Removing or Lowering draped strands
- Strand Cutting Order
- Coping Upper Flanges
- Limiting Number of Strands

REBAR PATTERN – Web Cracks

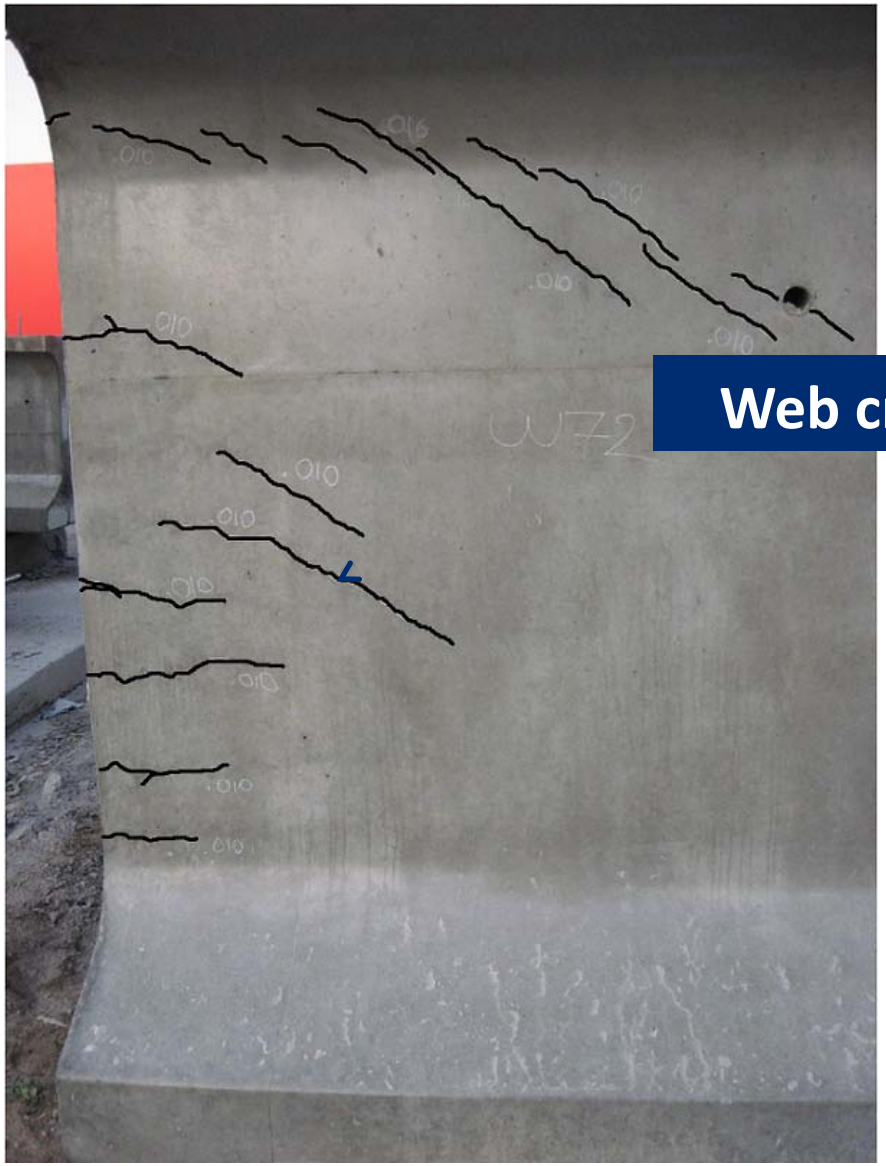

Web cracks

REBAR CONFIGURATIONS

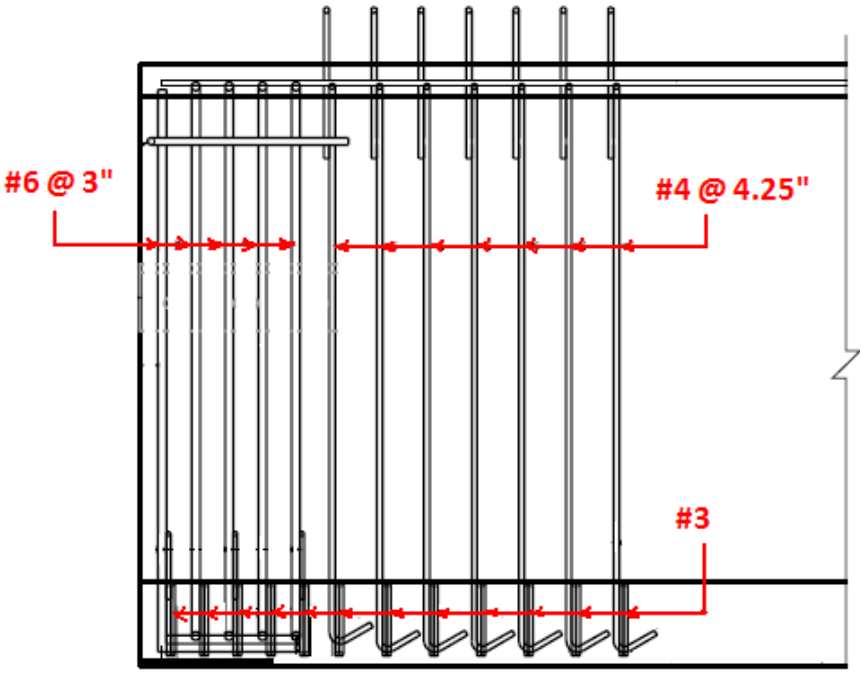

Standard RF

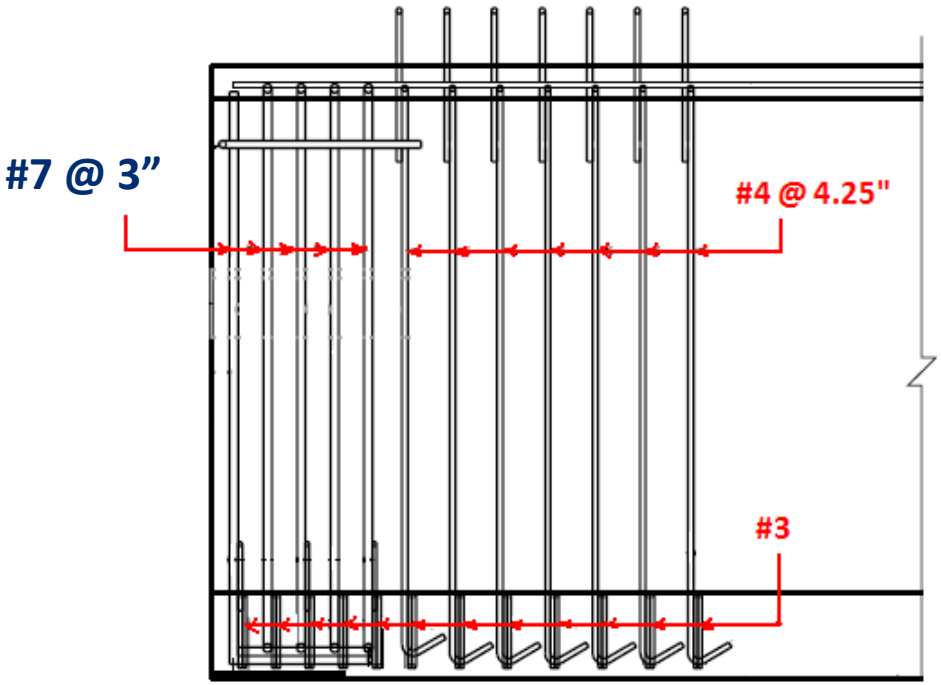

RF 1

REBAR CONFIGURATIONS

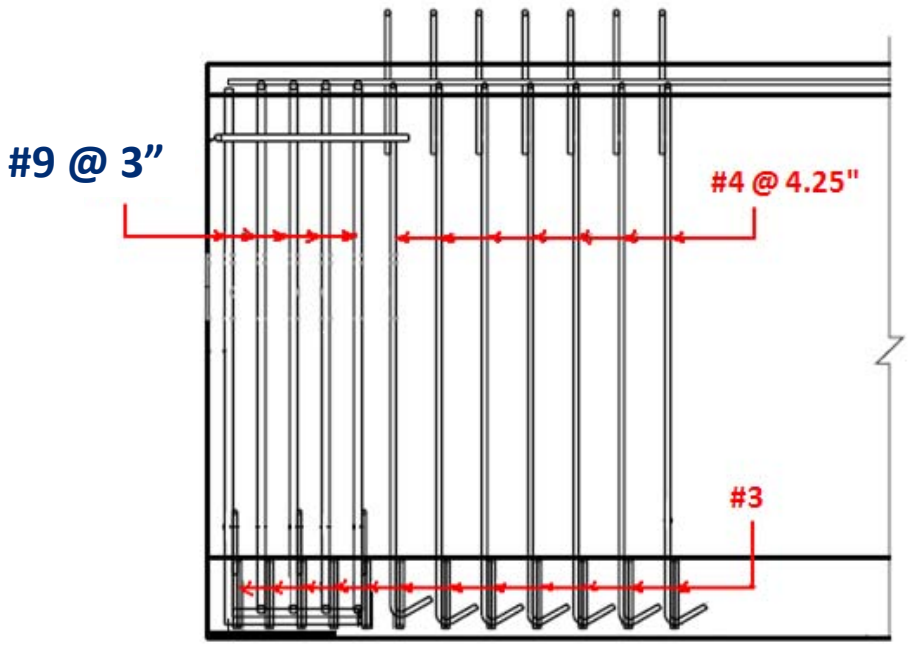

RF 5

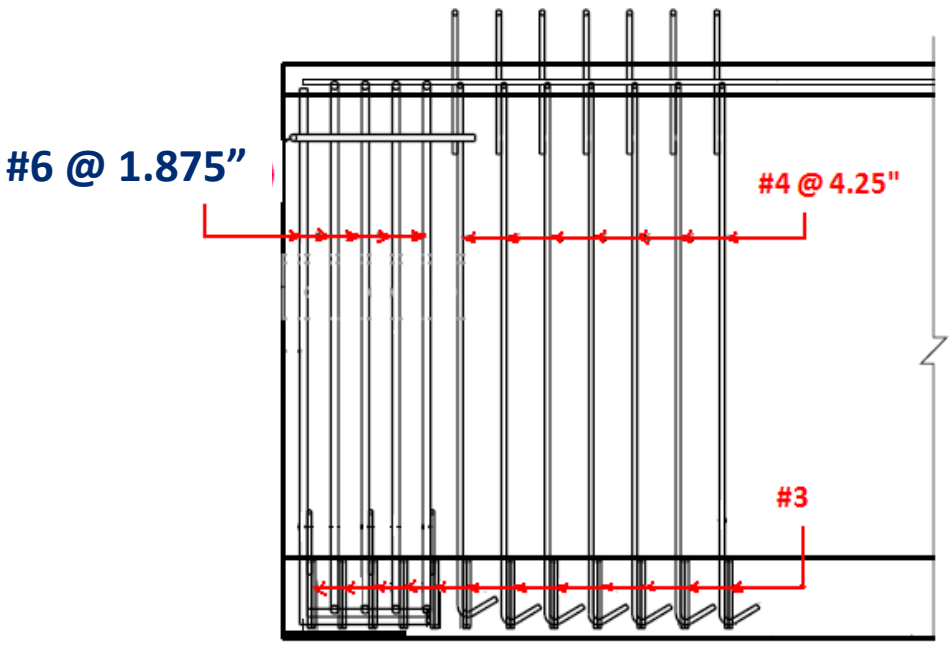

RF 11

REBAR CONFIGURATIONS

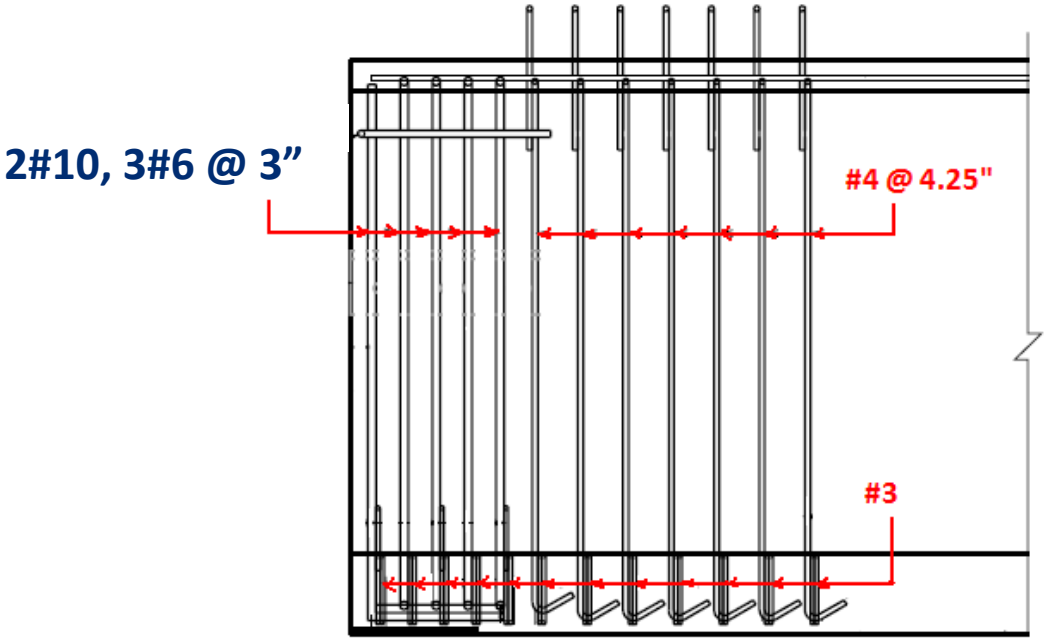

RF 8

REBAR PATTERN - Strains

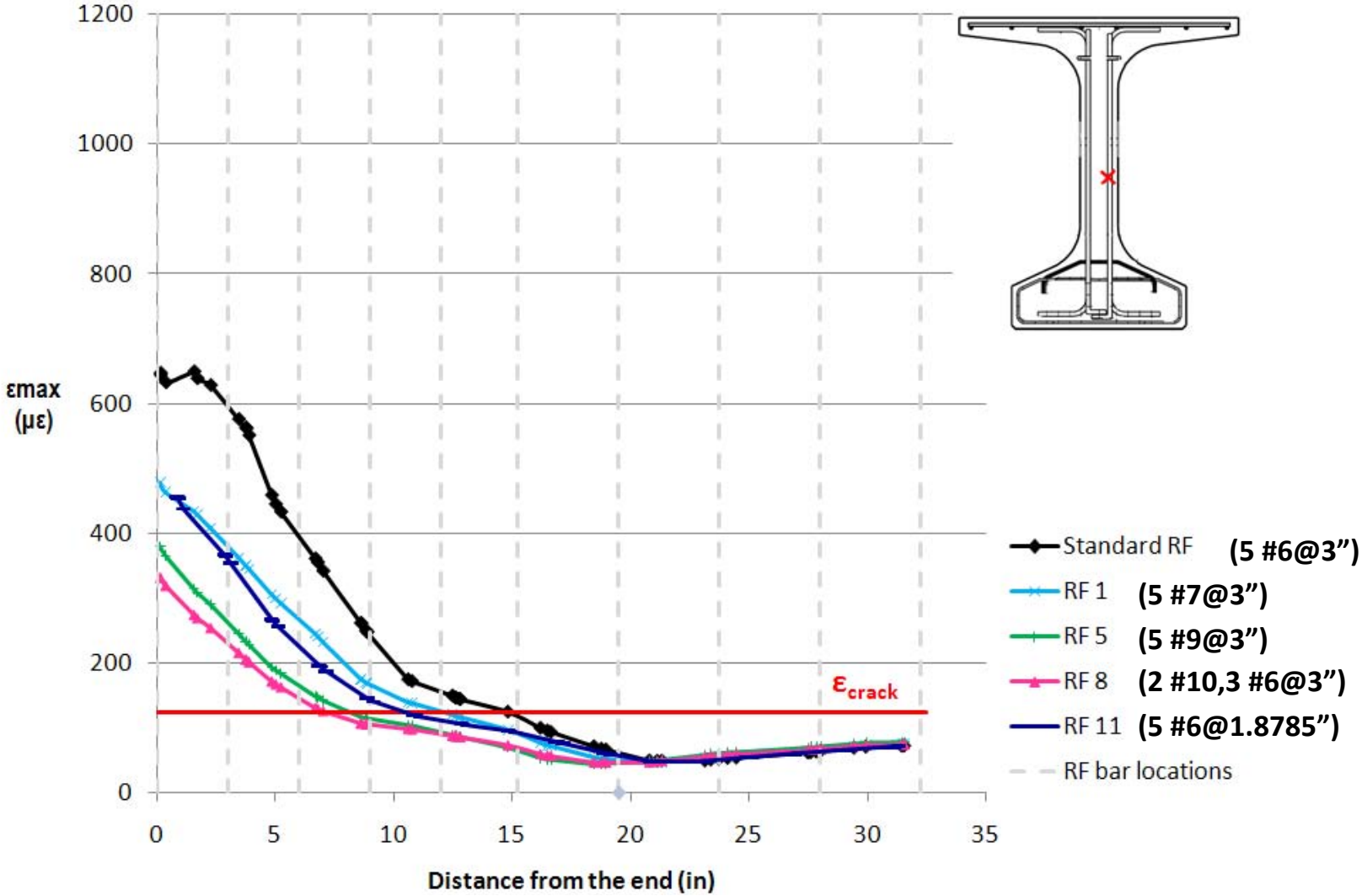

20% - 40% decrease in strains

REBAR PATTERN

Which bars are the most effective?

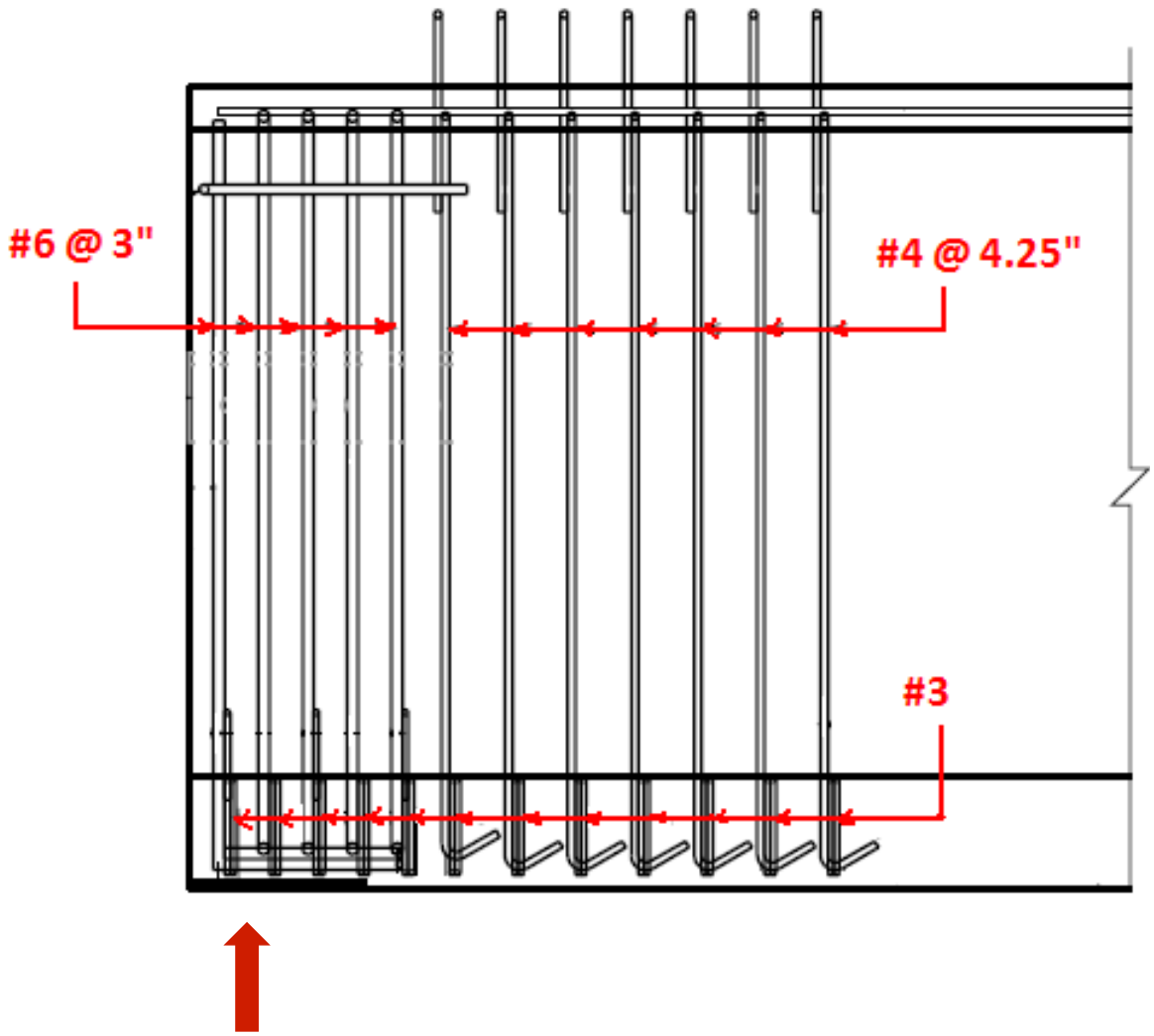

BOTTOM FLANGE REINFORCEMENT

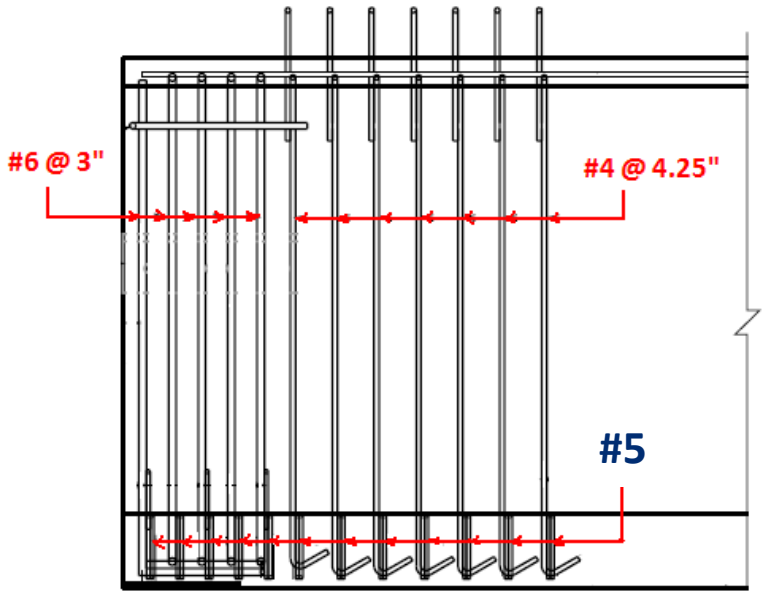

RF 7

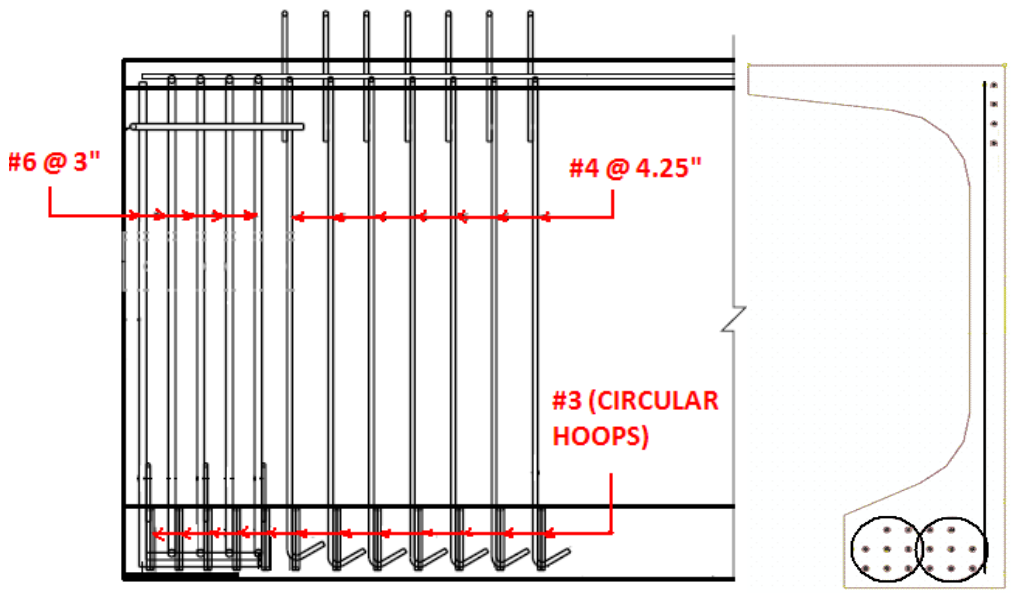

RF 12

Negligible strain decrease at the ends

DEBONDING – Inclined & Y Cracks

Inclined cracks

Y cracks

DEBONDING: 0%, 25%, 35%, 50%

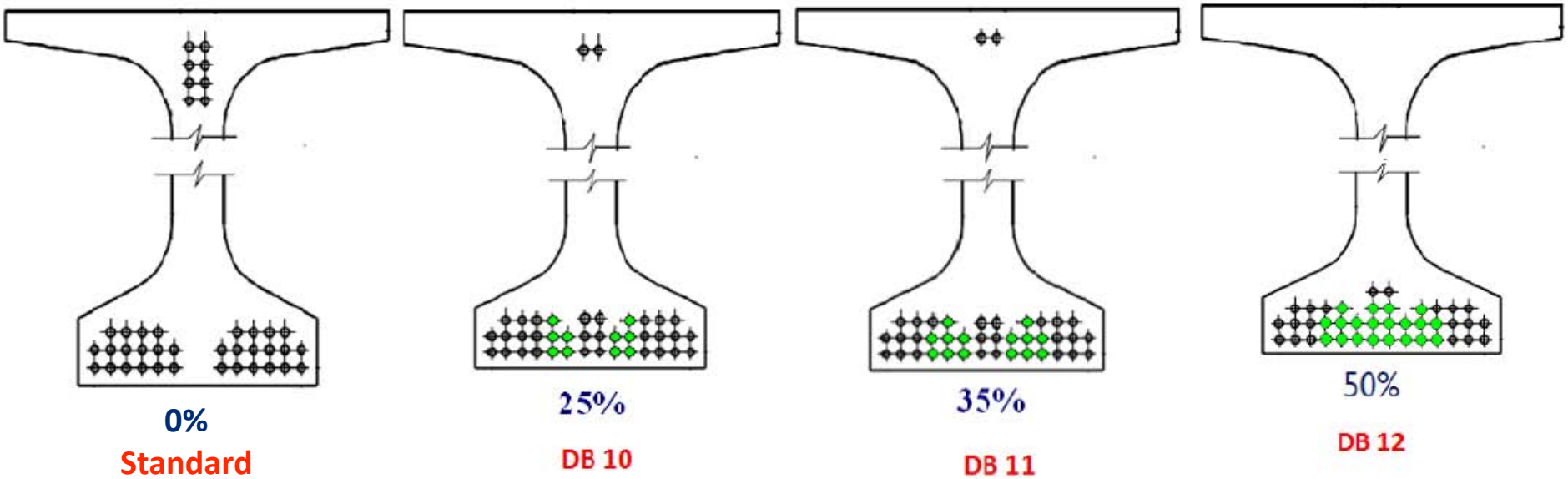

v

AASHTO Limit

NO DEBONDING – 0%

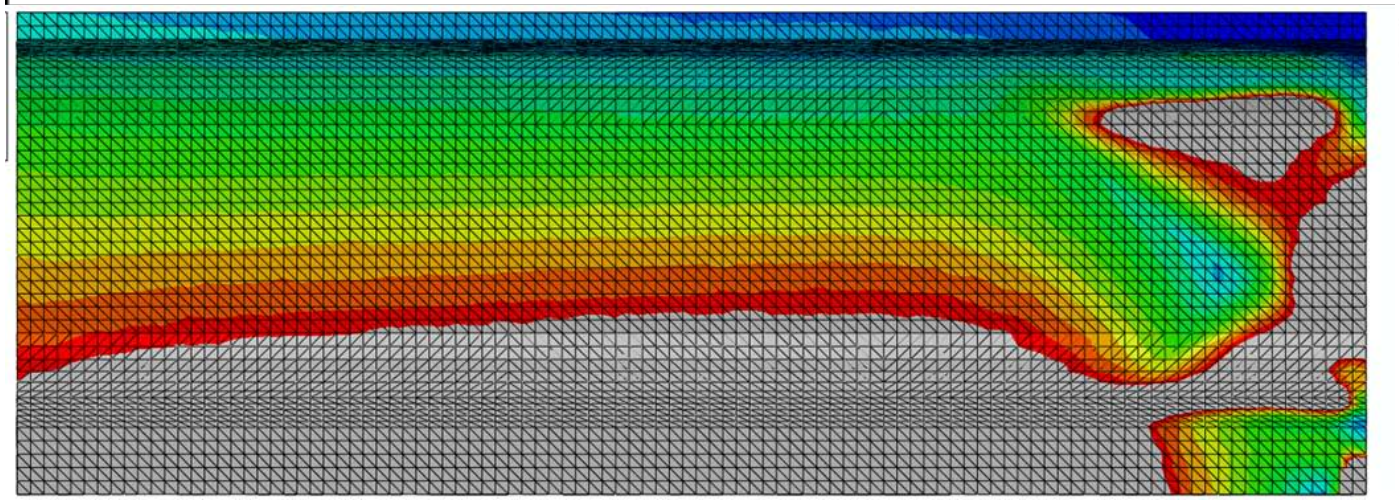

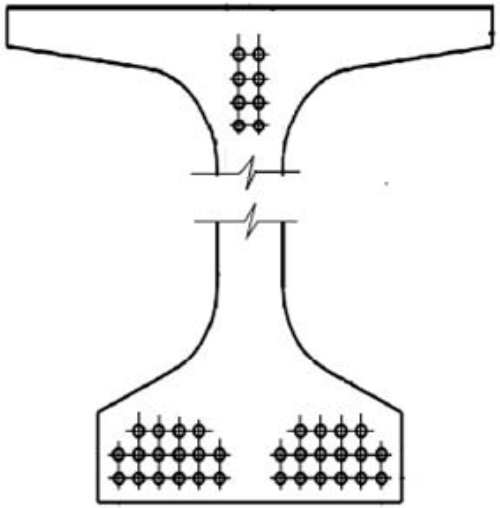

Standard

40 strands bonded

3 ft

$\varepsilon > \varepsilon_{crack}$

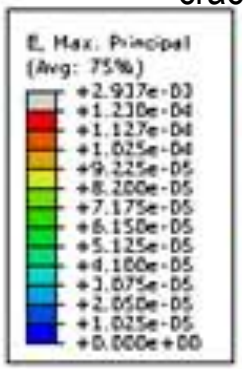

DEBONDING – 25%

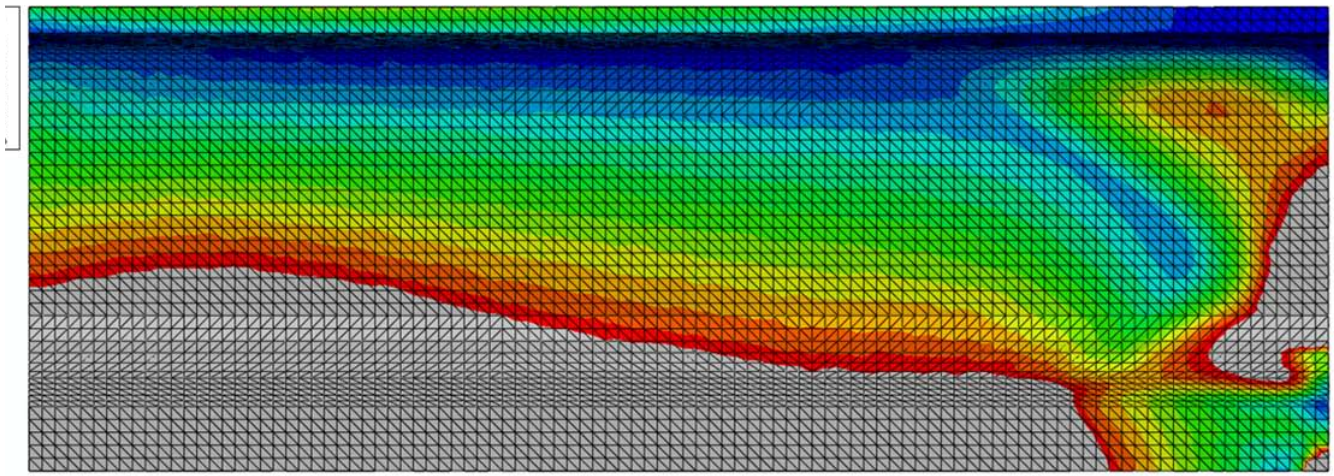

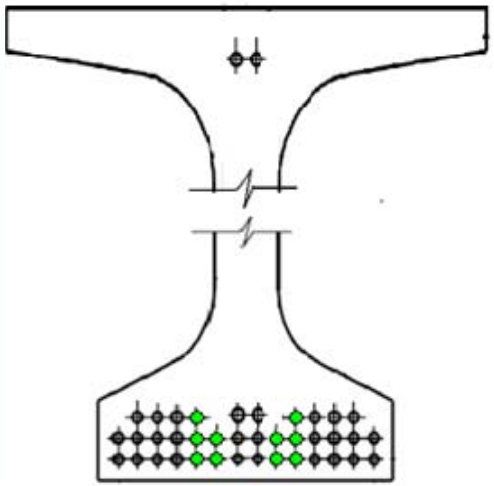

25%

DB 10

6 strands

3 ft

4 strands

3 ft

30 strands

3 ft

5 ft

$\varepsilon > \varepsilon_{crack}$

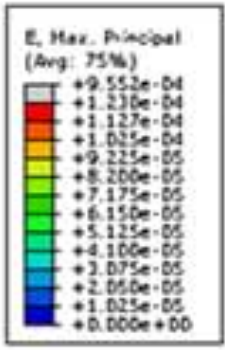

DEBONDING – 35%

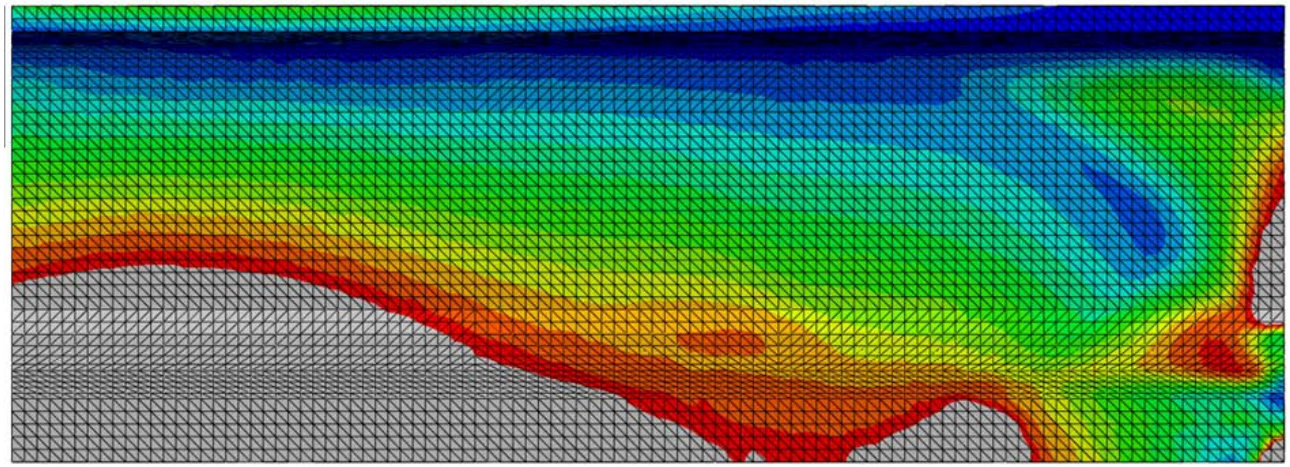

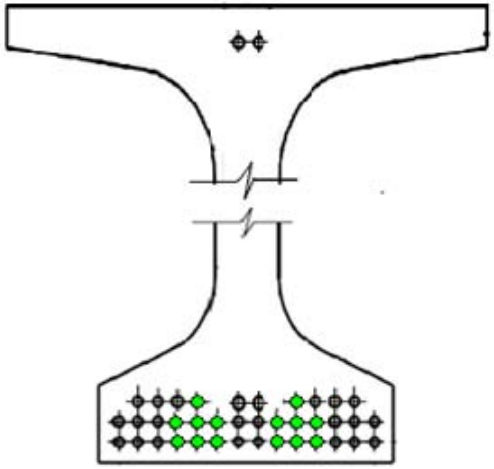

8 strands
3 ft

6 strands
3 ft

5 ft

26 strands
3 ft

$\varepsilon > \varepsilon_{crack}$

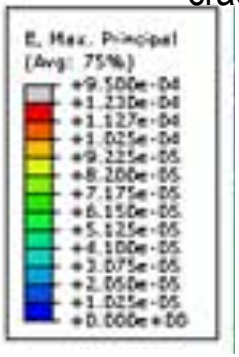

DEBONDING – 50%

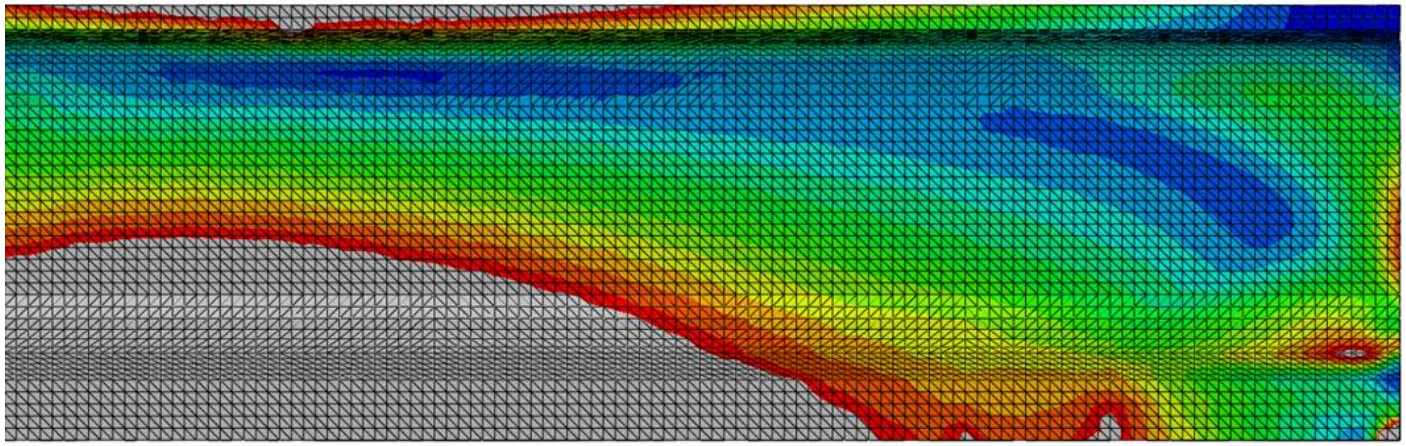

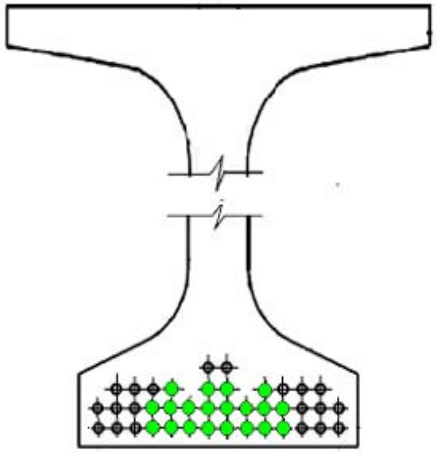

50%

DB 12

4 strands 3 ft | 8 strands 3 ft | 6 strands 3 ft | 20 strands 3 ft | 4 ft

$\varepsilon > \varepsilon_{crack}$

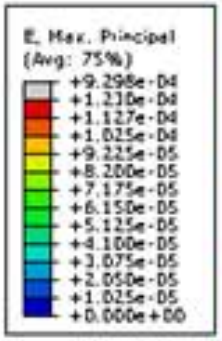

DEBONDING – Inclined Crack

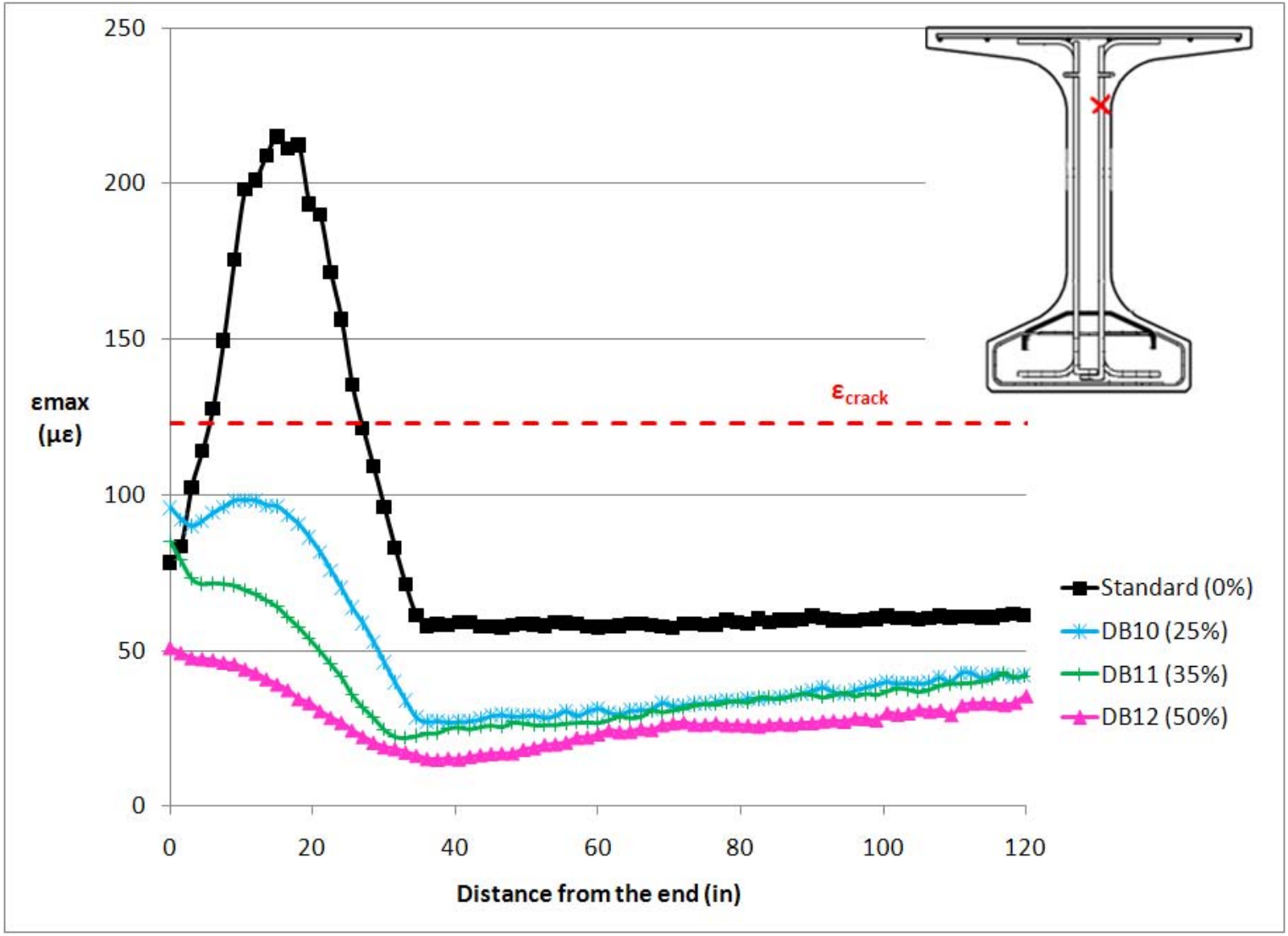

Debonding or Removing the draped strands decrease strains 50-70%.

DEBONDING – Y Cracks

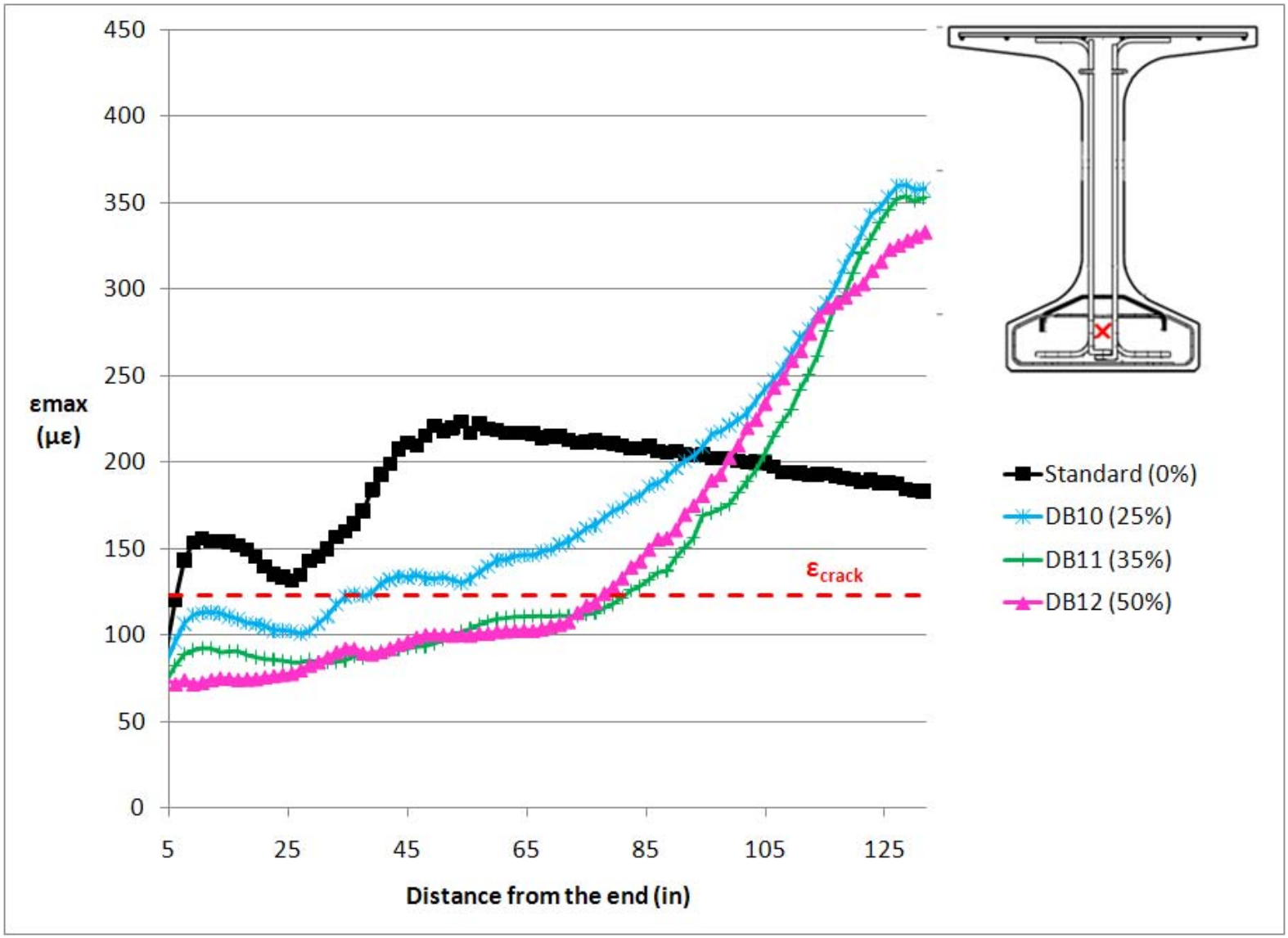

REBAR PATTERN & DEBONDING

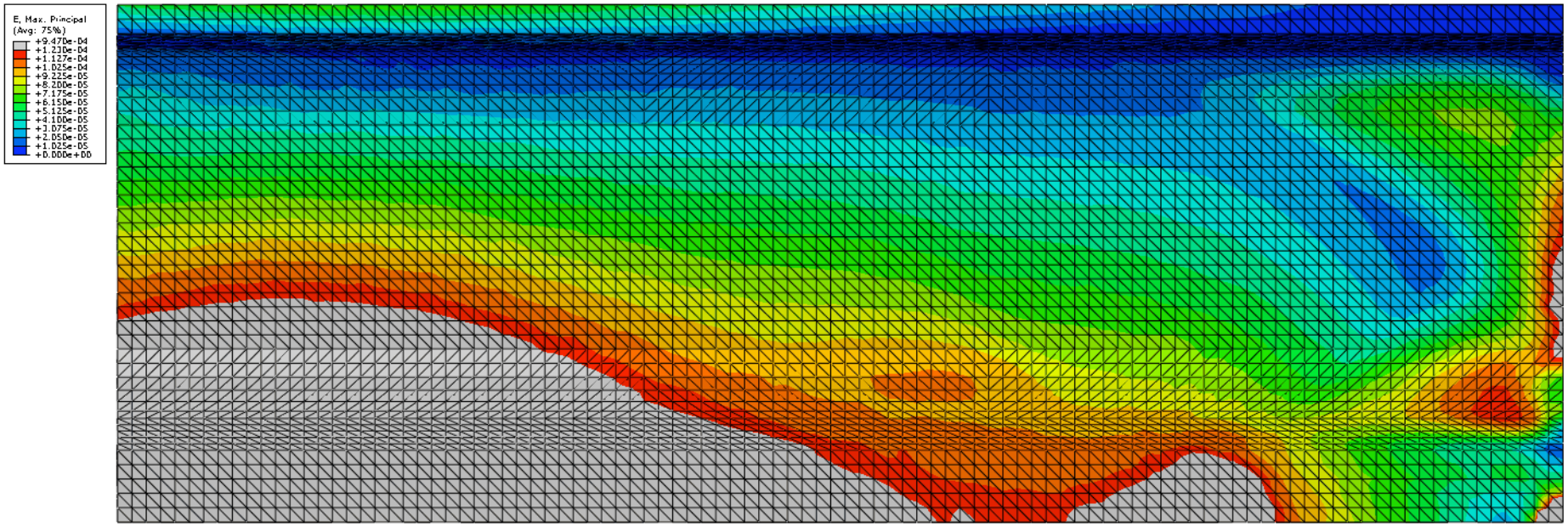

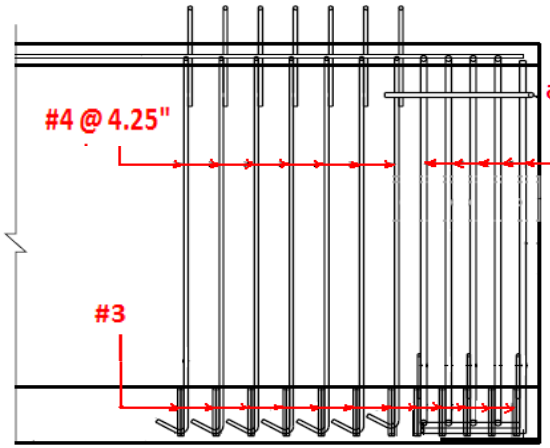

2#10, 3#6 @ 3”

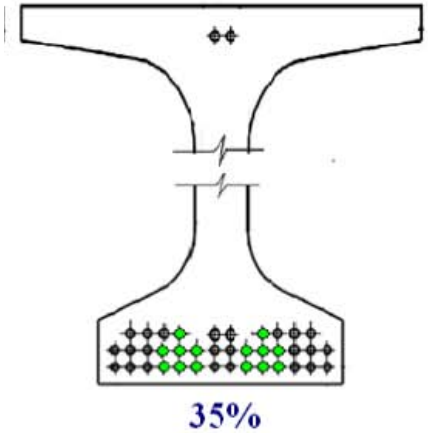

Debonding or Rebar Size can work together

LOWERING the DRAPED STRANDS

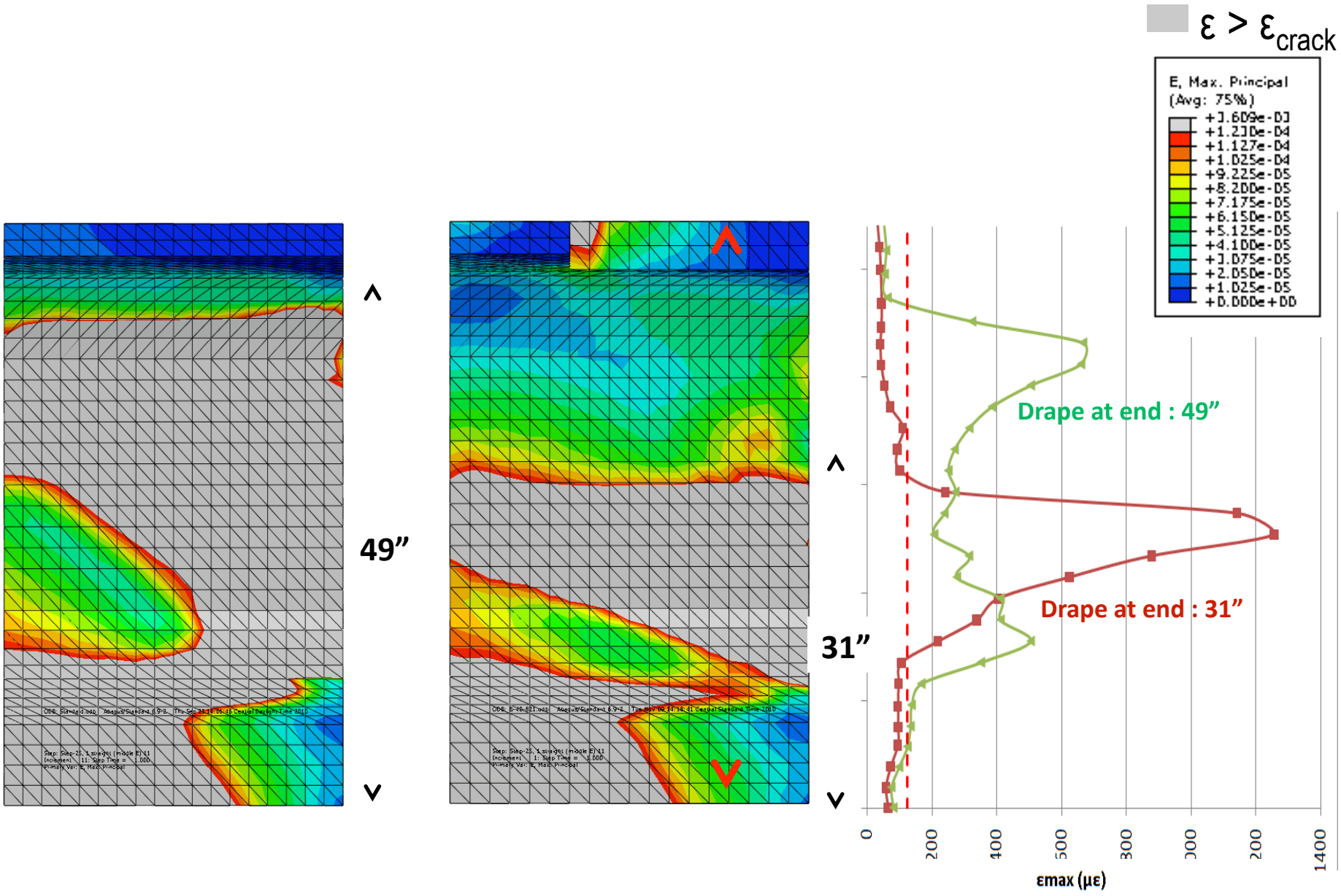

NUMBER of STRANDS

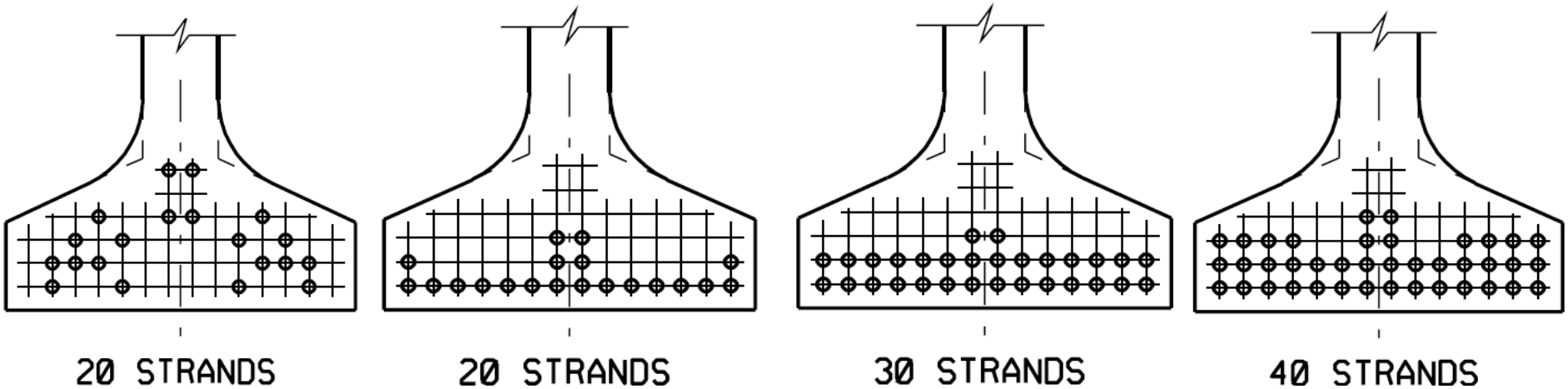

(no draped strands)

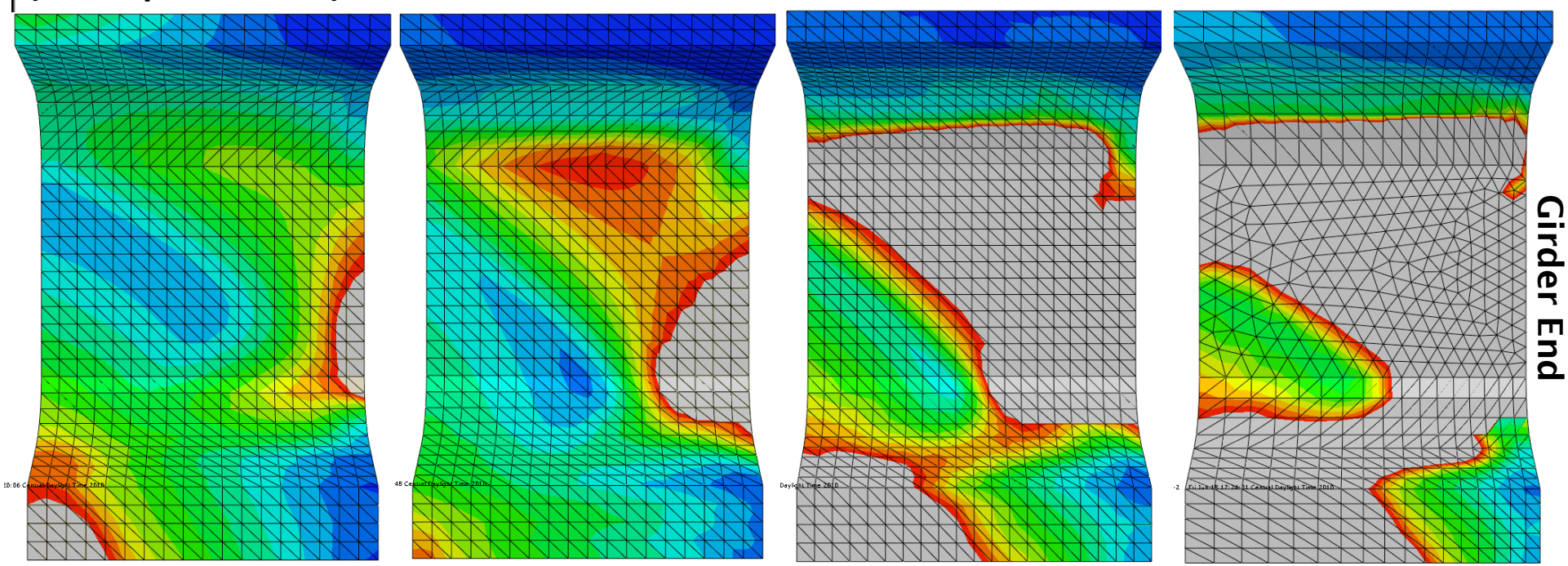

COPING the UPPER FLANGES

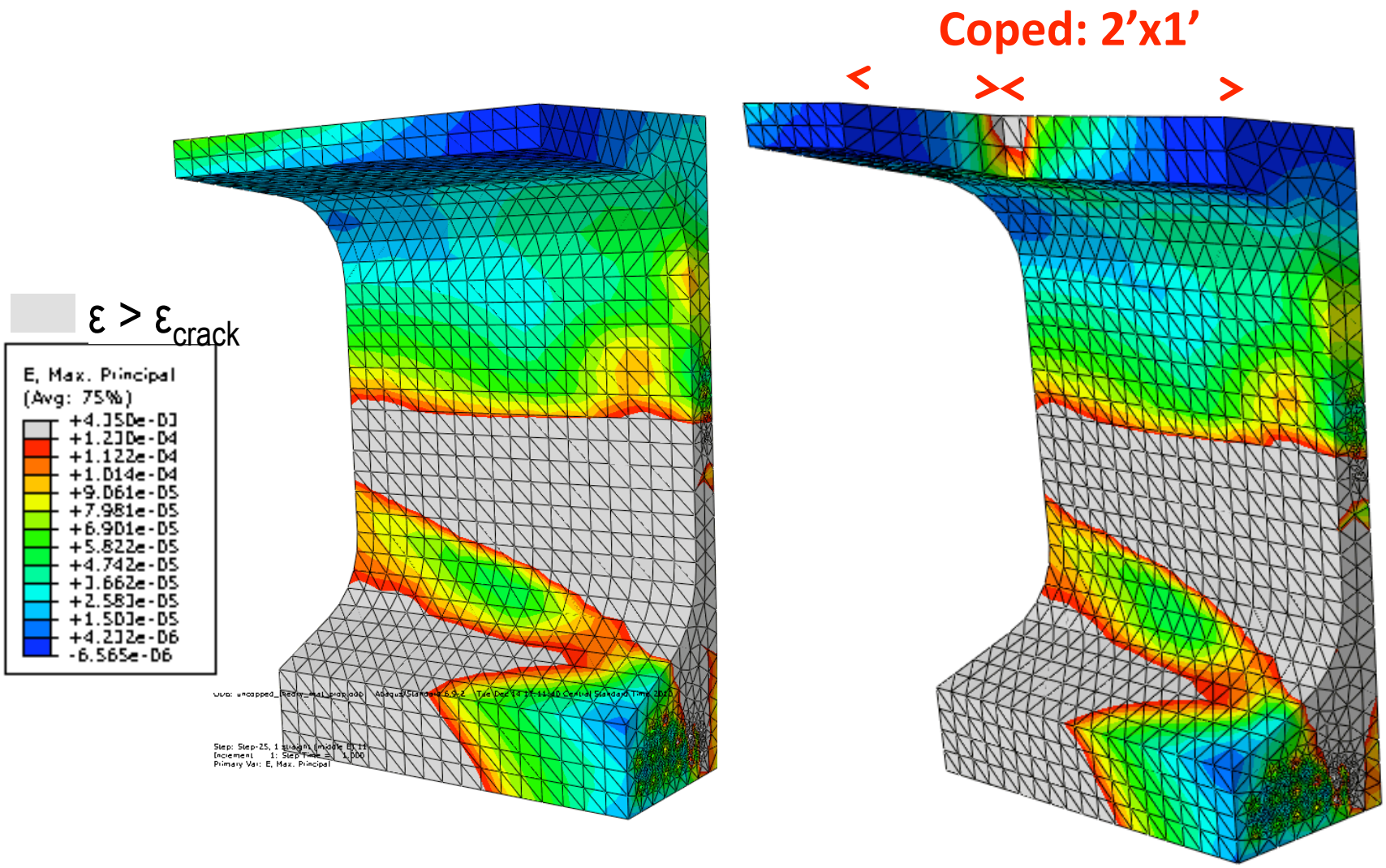

STRAND CUTTING ORDER

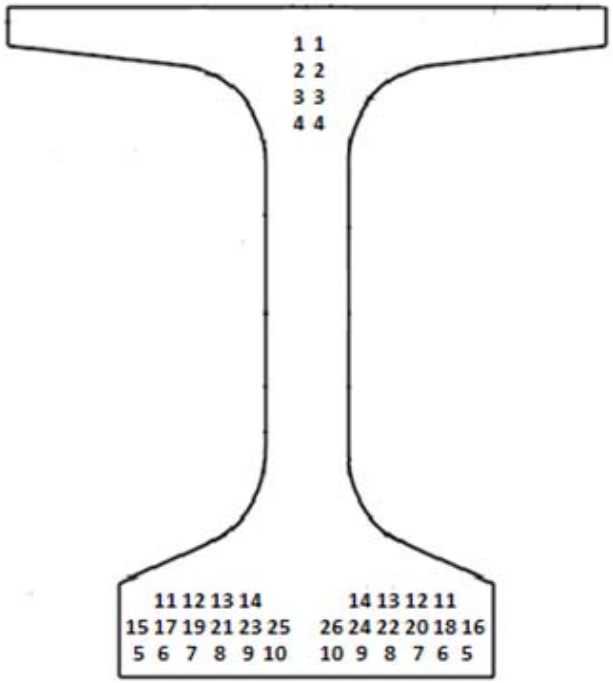

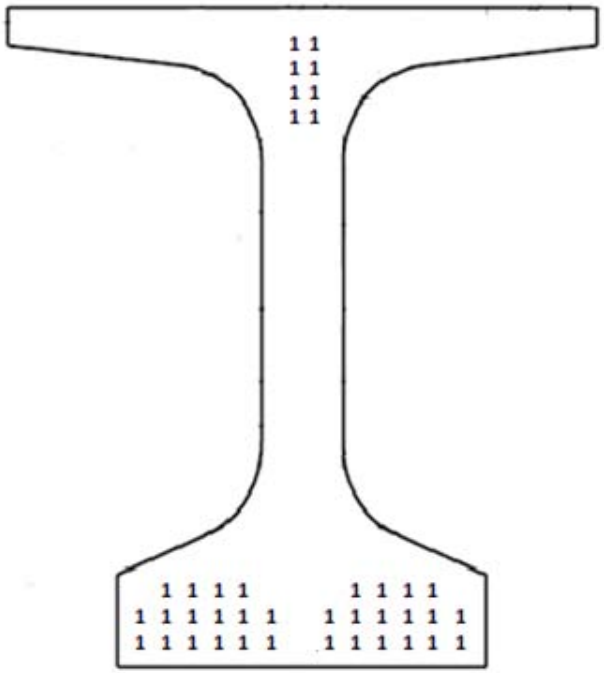

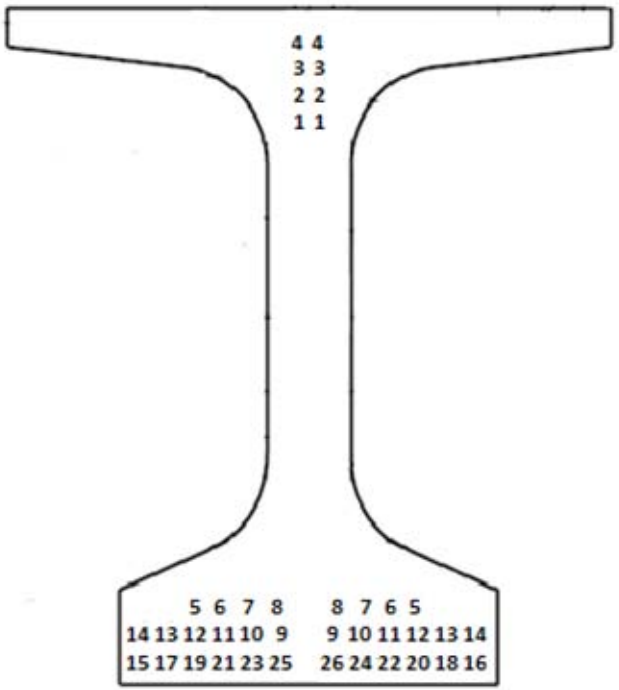

Almost identical results

CONCLUSIONS

- ✓ The rebar size increase leads to 20%-40% strain decrease in the mid web at the girder ends

CONCLUSIONS

- ✓ Debonding leads to 50-70% strain decrease, and could be helpful especially for inclined and Y cracks at the girder ends
- ✓ Removal of the draped strands eliminates the inclined cracks

CONCLUSIONS

- ✓ A combination of mild debonding and rebar size increase is a viable option

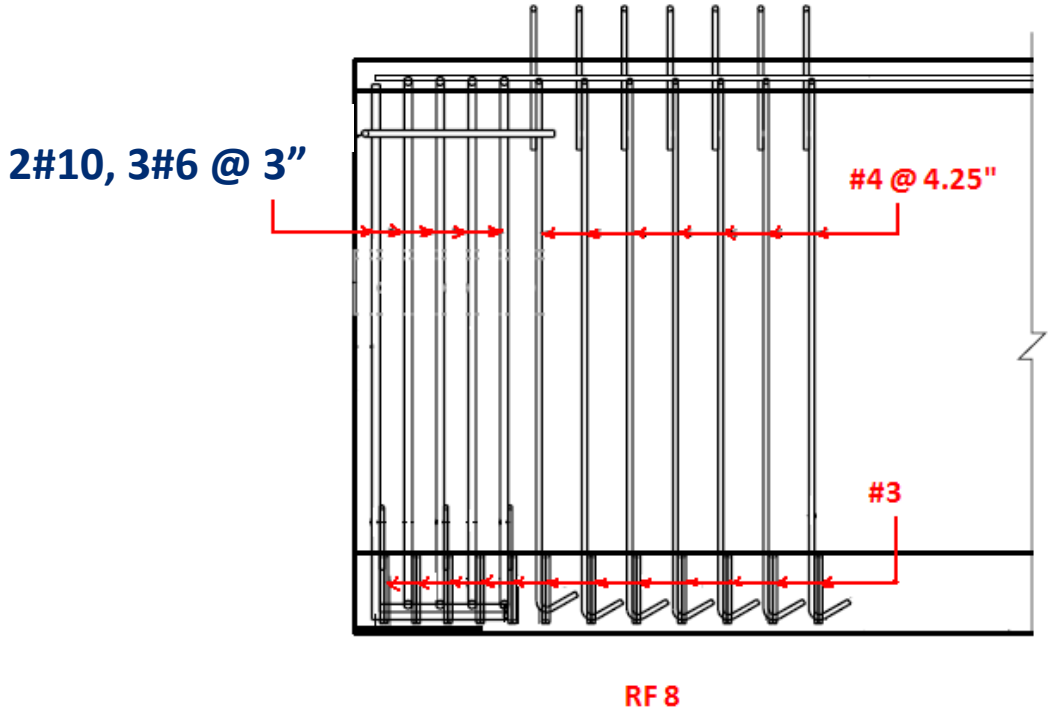

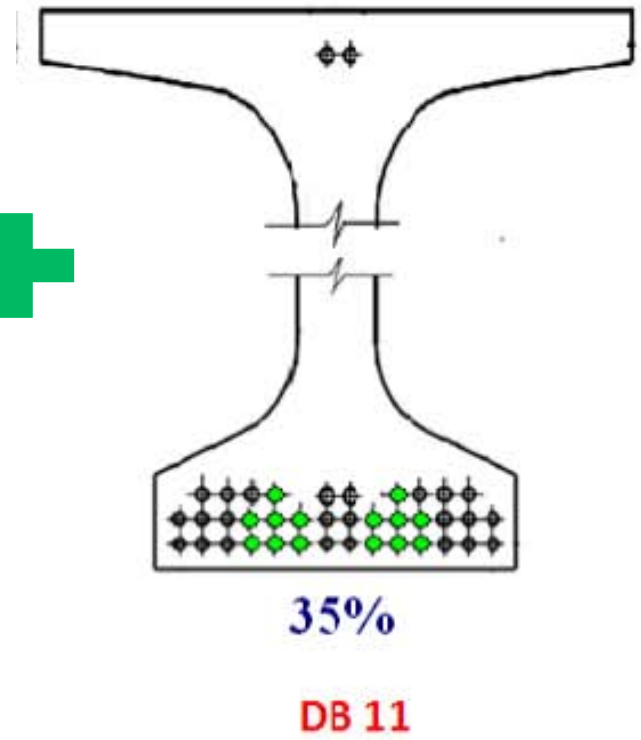

CONCLUSIONS

- ✓ Girder lifting causes the strains to jump and cracks to open

CONCLUSIONS

- ✓ Coping the upper flanges or changing the order of strand cutting does not affect the results
- ✓ Lowering the draped strands condenses the cracked area but does not decrease the strains at the ends

SUGGESTED FUTURE TASKS

- Build a girder with debonding, inspect cracks and test for shear
- Model girders with no draped strands
- Model the girder lift & crack opening
- Model the rebar slip for more realistic results
- Investigate bottom flange bursting strains further
- Create models to simulate the cracks explicitly

THANK YOU

QUESTIONS

?